NOT MEASUREMENT SENSITIVE

MIL-HDBK-240
01 November 2002

DEPARTMENT OF DEFENSE HANDBOOK

HAZARDS OF ELECTROMAGNETIC RADIATION TO ORDNANCE (HERO) TEST GUIDE

This handbook is for guidance only.
Do not cite this document as a requirement.

AMSC N/A **AREA EMCS**

DISTRIBUTION STATEMENT A. Approved for public release; distribution is unlimited.

This page left intentionally blank.

Foreword

1. This handbook is approved for use by all Departments or Agencies of the Department of Defense (DoD).

2. This handbook was prepared for contractors, DoD test agencies, activities, and test planners, and is intended for guidance only. This handbook cannot be cited as a requirement. If it is, the contractor does not have to comply.

3. This handbook provides recommended practices for conducting Hazards of Electromagnetic Radiation to Ordnance (HERO) evaluations. Developed over many years by DoD test activities, the methods and procedures described herein are the product of the collective DoD HERO test experience. This handbook consolidates these practices into a single document vice numerous individual Service standards, instructions, and so forth, thus promoting a standardized approach.

4. This handbook was prepared by the Services under the sponsorship of the Joint Ordnance Commander's Group HERO Subcommittee in accordance with the guidelines of the Standardization Reform Policy established by the Secretary of Defense.

5. Comments, recommendations, additions or deletions, and any other pertinent data that may be of use in improving this document should be made using the self-addressed Standardization Document Improvement Proposal (DD Form 1426) at the end of this handbook or via a letter addressed to:

Defense Information Systems Agency (DISA)
Joint Spectrum Center (JSC)
Attn: JSC/J5
2004 Turbot Landing
Annapolis, MD 21402-5064

CONTENTS

Paragraph **Page**

1. SCOPE 1

1.1 Purpose 1

1.2 Background 1

2. APPLICABLE DOCUMENTS 3

2.1 General 3

2.2 Government Documents 3

2.2.1 Specifications, Standards, and Handbooks 3

2.2.2 Other Government Documents and Publications 3

2.3 Non-Government Documents 4

3. DEFINITIONS 6

3.1 Acronyms 7

3.2 Definitions 8

3.2.1 Dudding 8

3.2.2 Electrically Initiated Device (EID) 9

3.2.3 Electromagnetic Environment (EME) 9

3.2.4 Electromagnetic Environmental Effects (E3) 9

3.2.5 Hazards of Electromagnetic Radiation to Ordnance (HERO) 9

3.2.6 HERO Margins 9

3.2.7 Margin 10

3.2.8 Maximum Allowable Environment (MAE) 10

3.2.9 Maximum No-Fire Current (MNFC) 10

3.2.10 Maximum No-Fire Stimulus (MNFS) 10

3.2.11 Ordnance 10

3.2.12 Ordnance Configurations 10

3.2.13 Presence 10

3.2.14 Reliability Consequence 11

3.2.15 Response Time 11

3.2.16 Safe Ordnance Separation Distance 11

3.2.17 Safety Consequence (hard) 11

3.2.18 Safety Consequence (soft) 11

3.2.19 Stockpile-to-Safe Separation Sequence (S4) 11

3.2.20 SUT Operating Frequencies 12

3.2.21 Thermal Stacking 12

4. HERO OVERVIEW 12

4.1 The Need for HERO Control 13

4.2 Approaches to Addressing the HERO Problem 13

4.2.1 Commonality 14

4.2.2 Program Responsibilities 14
4.3 HERO Assessments 15
4.3.1 Analyses 15
4.3.2 Test Approaches/Procedures 16
4.4 Data Repositories 18
4.5 Risk Assessment/Management 18
4.5.1 EMCON Bills 18
4.5.2 JOERAD 19
5. TEST PLANNING 21
5.1 Overview 21
5.2 Ordnance Documentation 21
5.2.1 Mission 21
5.2.2 Ordnance Description 21
5.2.3 Associated Equipment 22
5.2.4 S4 Description 22
5.3 Pretest Assessment 23
5.3.1 EID Description and Characteristics 23
5.3.1.1 Types of EIDs 24
5.3.1.2 Firing Sensitivity 24
5.3.1.3 Bridgewire Resistance 25
5.3.1.4 Response Time 25
5.3.1.5 Sub-Component Containing the EID 26
5.3.1.6 EID Function 26
5.3.1.7 Firing Consequence 26
5.3.2 Evaluation of RF-Protective Features 27
5.3.2.1 Enclosures 27
5.3.2.2 Cables and Connectors 28
5.3.2.3 Electromagnetic Interference (EMI) Gaskets 28
5.3.2.4 EMI Filters 28
5.3.3 Firing Systems 29
5.3.3.1 Typical EID Circuit Design 29
5.3.3.2 Energized vs. Non-Energized Firing Circuits 31
5.3.3.3 In-Line vs. Out-of-Line Circuits/Explosive Trains 32
5.3.3.3.1 In-Line Circuits/Explosive Trains 32
5.3.3.3.2 Out-of-Line Circuits/Explosive Trains 32
5.3.4 Multiple Platform/System Analysis 32
5.3.5 Response Prediction 32
5.3.5.1 Results of Previous Tests 33
5.3.5.2 Analytical Prediction of Resonances 33
5.3.5.3 Analytical Tools 33
5.3.5.4 Ordnance Operating Frequencies 34
5.4 Test Configuration 34
5.4.1 Physical Configurations 34

5.4.1.1 Ordnance System Under Test (SUT) 35
5.4.1.1.1 Pre-Production/First Article vs. Production Item 35
5.4.1.1.2 Explosively Loaded vs. Inert Test Articles 35
5.4.1.1.3 Tactical Configurations vs. Training and Telemetry Versions 36
5.4.1.1.4 Multiple Host Platforms, Launchers, Interface Cables, and Diagnostic Equipment 36
5.4.1.2 Ordnance Configurations 36
5.4.1.2.1 Transportation/Storage 36
5.4.1.2.2 Assembly/Disassembly 37
5.4.1.2.3 Handling/Loading 37
5.4.1.2.4 Staged 37
5.4.1.2.5 Platform-Loaded 37
5.4.1.2.6 Immediate Post-Launch 37
5.4.1.3 Ancillary Equipment 38
5.4.2 Operating Procedures 38
5.4.2.1 Standard Operating Procedures 39
5.4.2.2 Non-Standard (not specifically authorized) Operating Procedures 39
5.4.3 Expected EME 39

5.5 Test EME Levels 39
5.5.1 EME Parameters 39
5.5.1.1 Test Frequencies 40
5.5.1.2 Field Strength Levels 40
5.5.1.3 Illumination Angles 46
5.5.1.4 Polarization 46
5.5.1.5 Modulation 47

5.6 EID Instrumentation 47
5.6.1 Instrumentation Characteristics 47
5.6.1.1 Sensitivity 48
5.6.1.2 Instrumentation System Response Time 48
5.6.1.3 Effects of Instrumentation on SUT 49
5.6.2 Types of Instrumentation 49
5.6.2.1 Sensors and Transducers 50
5.6.2.2 Actual EID vs. Substituted Devices 52
5.6.2.3 Optical vs. Conductive-Type Sensors 53
5.6.2.4 Sensor-to-Bridgewire Proximity 53
5.6.2.5 Computers and Recording Devices 53
5.6.3 Instrumenting Bridgewire EIDs and Ordnance 53
5.6.4 Instrumentation/Monitoring Firing Circuits and Electronic Devices 55
5.6.5 Non-Instrumented Testing (Go/No-Go Type) 55
5.6.5.1 Safety/Reliability Margin Verification Test 55
5.6.5.2 Statistical Sample Size Verification Test 56
6. CONDUCTING THE TEST 57

6.1 Introduction 57

6.2 Safety 57
6.2.1 Standard Operating Procedure (SOP) 57

6.2.2 Safety Briefings ... 57
6.2.3 Ordnance Handling ... 58
6.2.4 Permissible Exposure Limit (PEL) ... 58
6.2.4.1 Radiated PELs ... 58
6.2.4.2 I/CC PELs ... 60
6.2.5 Ensuring Compliance with PELs ... 64
6.2.6 Operations Involving Host Platforms and Ancillary Equipment ... 64
6.2.7 Personal Protective Equipment (PPE) ... 64

6.3 Generating Test EME Levels ... 64
6.3.1 Environments Below 2 MHz ... 64
6.3.2 HF Environment (2-30 MHz) ... 64
6.3.2.1 Recommended Test Frequencies ... 65
6.3.2.2 Field Strength Levels ... 65
6.3.2.3 Transmitting Antennas ... 65
6.3.2.4 Field Calibration ... 67
6.3.2.5 Illumination Angles/Illumination Area ... 69
6.3.2.6 Polarization ... 70
6.3.2.7 Modulations ... 70
6.3.2.8 Pretest Platform Characterization Measurements ... 70
6.3.2.8.1 Platform-to-Ground Current Measurements ... 71
6.3.2.8.2 Voltage-Ground Measurements ... 71
6.3.3 VHF Environment (30-225 MHz) ... 74
6.3.3.1 Frequencies ... 74
6.3.3.2 Field Strength Levels ... 74
6.3.3.3 Transmitting Antennas ... 75
6.3.3.4 Field Calibration ... 76
6.3.3.5 Illumination Angles/Illumination Area ... 77
6.3.3.6 Polarization ... 78
6.3.3.7 Modulations ... 78
6.3.4 Frequencies Above 225 MHz ... 78
6.3.4.1 Frequencies ... 79
6.3.4.2 Field Strength Levels ... 79
6.3.4.3 Transmitting Antennas ... 80
6.3.4.4 Field Calibration ... 80
6.3.4.5 Illumination Angles/Illumination Area ... 81
6.3.4.6 Polarization ... 82
6.3.4.7 Modulations ... 82

6.4 Maximizing Responses ... 82
6.4.1 Illumination Angles ... 82
6.4.2 Frequency Increments ... 82
6.4.3 Stimulus Dwell Time ... 82
6.4.4 Communication ... 82

6.5 Non-Linear Effects ... 83
6.5.1 RF Arcing ... 83
6.5.2 Energized Circuit Susceptibility ... 83

6.6 Susceptibility Investigation 84
6.6.1 Identifying Points of Entry 84
6.6.2 Fix Development and Verification 84
7. DATA ANALYSIS 85
7.1 Introduction 85
7.2 Detected Responses 85
7.3 Undetected Responses 85
7.4 Pass/Fail Criteria (Required Margins) 85
7.4.1 Firing Consequence Factors (FCFs) 86
7.5 Determination of EID Response at Criteria EME Level 86
7.5.1 Determination of Pass/Fail 86
7.5.2 Determination of Pass/Fail Margin 87
7.6 Determination of Maximum Allowable Environment 87
7.6.1 Extrapolation Limits 87
7.7 Determination of MAE Per Frequency Band 88
8. DOCUMENTATION 91
8.1 Introduction 91
8.2 Purpose of Test Documentation 91
9. NOTES 93
9.1 Intended Use 93
9.2 Supersession Data 93
9.3 Cross Reference of Classifications and Substitutability Data 93
9.4 Subject Term (Keyword) Listing 93
9.5 Identification of Changes 93
9.6 Technical Points of Contact 93

APPENDICES

APPENDIX A DOCUMENTATION 95

FIGURES AND TABLES

FIGURES **Page**

FIGURE 1. Ordnance Stockpile-to-Safe Separation Sequence 17
FIGURE 2. Typical HBW Firing Circuit With an S&A Device 29
FIGURE 3. Differential Mode of RF Excitation in a Two-Wire Firing System..... 30
FIGURE 4. Coaxial Mode RF Excitation in a Coaxial Firing System..... 31
FIGURE 5. Coaxial Mode RF Excitation in a Two-Wire Firing System..... 31
FIGURE 6. VHF and Radar Illumination Angles..... 46
FIGURE 7. Metal-Junction Thermocouple Instrumentation for Bridgewire-Type EIDs 50
FIGURE 8. Typical Optical Sensor Instrumentation for Bridgewire-Type EIDs..... 50
FIGURE 9. Bridgewire-type EID Instrumented With a Metal-Junction Thermocouple..... 51
FIGURE 10. Bridgewire-Type EID Instrumented With an Optical Thermocouple 52
FIGURE 11. Vacuum Thermocouple/Simulated Bridgewire-Type 52
FIGURE 12. Radiated PELs for Restricted Environments 59
FIGURE 13. Maximum Exposure Time 60
FIGURE 14. EME Transmission Equipment and Antennas Block Diagram..... 66
FIGURE 15. Recommended HF Test Frequencies..... 67
FIGURE 16. Far-Field Distance for HF Monopole 68
FIGURE 17. HF Field Calibration Technique 69
FIGURE 18. Helicopter in Nose-on Orientation From 35-Foot HF Antenna..... 70
FIGURE 19a. RF Current-Ground for F-14 Aircraft in Nose-on Orientation..... 72
FIGURE 19b. RF Current-Ground for F-14 Aircraft in Tail-on Orientation..... 72
FIGURE 19c. F-14 Aircraft-to-Ground RF Voltages (Nose-on Orientation)..... 73
FIGURE 19d. F-14 Aircraft-to-Ground RF Voltages (Tail-on Orientation) 73
FIGURE 20. Voltage-Ground Measurements Setup..... 74
FIGURE 21. Recommended VHF Test Frequencies..... 75
FIGURE 22. Far-Field Distance for VHF Yagi and Log Periodic Antennas 76
FIGURE 23. VHF Range Calibration Technique 77
FIGURE 24. llumination of Test Item at VHF Frequencies..... 78
FIGURE 25. Recommended Test Frequencies Above 225 MHz 79
FIGURE 26. Field Calibration Technique Above 225 MHz 81
FIGURE 27. RF Arc Generated During HERO Testing..... 83

TABLES **Page**

TABLE 1. DoD Commands Concerned With HERO..... 15
TABLE 2. EID Identification/Characteristics..... 24
TABLE 3. Typical EID Characteristics..... 24
TABLE 4a. Test Frequencies Below 30 MHz[1]..... 42
TABLE 4b. VHF Test Frequencies[1] 43

TABLE 4c. Test Frequencies Above 225 MHz[1] 44
TABLE 4c. Test Frequencies Above 225 MHz[1] 45
TABLE 5. HERO Test EME Levels 45
TABLE 6. Radiated PELs for Restricted Environments 58
TABLE 7. Induced/Contact Current Restrictions 61
TABLE 8a. Exposure and I/CC Limits for Frequencies Below 30 MHz 61
TABLE 8b. Exposure and I/CC Limits for VHF/UHF Frequencies 62
TABLE 8c. Exposure and I/CC Limits for Frequencies Above 225 MHz 62
TABLE 8c. Exposure and I/CC Limits for Frequencies Above 225 MHz (continued) 63
TABLE 9. MAE Extrapolation Limits 89

CONCLUDING MATERIAL……...109

1. SCOPE

1.1 Purpose

This handbook is concerned with Hazards of Electromagnetic Radiation to Ordnance (HERO) testing for all Air Force, Army, Navy, and Marine Corps ordnance items and support equipment, for all mission areas. Although this handbook is intended primarily for use by Department of Defense (DoD) HERO test activities, it also provides a consolidation of corporate knowledge about the subject that should be of interest to procurement authorities and system developers.

This handbook supplements MIL-STD-464 by providing guidance for verification of the HERO requirements in that standard. Documentation associated with HERO testing is described in Appendix A of this handbook.

This handbook is for guidance only and cannot be cited as a requirement. If it is, the contractor does not have to comply.

1.2 Background

This handbook has four specific objectives:

a. Document HERO Tri-Service test methodology,
b. Promote test standardization,
c. Identify alternative techniques and instrumentation, and
d. Facilitate the exchange of HERO test data.

Ultimately, HERO test data are used to determine the maximum allowable environment (MAE) for ordnance and weapon systems containing electrically initiated devices (EIDs). MAE information is used to assess HERO risks and develop effective control measures to minimize those risks.

HERO assessments are made essentially to determine how EIDs respond to the electromagnetic environment (EME) that could be encountered by the ordnance throughout its service life. This response can be influenced by three principal factors:

a. EME characteristics,
b. Physical configuration(s) of the ordnance, and
c. Handling procedures.

Each factor must be considered in the context of the stockpile-to-safe separation sequence (S4), that is, from the time it leaves the storage facility until it is at a safe post-launch location or in a safe post-deployment configuration.

When defining the operational EME, one must anticipate not only the individual Service EME, but also the EME in Joint-operation scenarios. As an example, Army and Air Force helicopters, loaded with Army/Air Force ordnance, were exposed to Navy shipboard EME levels during

Operation Restore Democracy. As a result, there were numerous concerns relating to safe storage and checkout of weapons that were not necessarily designed for, much less tested to, the Navy's unique shipboard EME levels. As Joint operations become more commonplace, there is an increased likelihood that weapons from one Service will be exposed to another Service's EME levels. MIL-STD-464 specifies the requirements for HERO certification.

2. APPLICABLE DOCUMENTS

2.1 General

The following documents and publications form a part of this handbook to the extent specified herein. These documents are the most relevant to fully understand the information provided by this handbook.

2.2 Government Documents

2.2.1 Specifications, Standards, and Handbooks

The following documents form a part of this handbook to the extent specified herein. Unless otherwise specified, the issues of these documents are those listed in the latest issue of the Department of Defense Index of Specifications and Standards (DoDISS) and supplement thereto.

Department of Defense

MIL-HDBK-237	Electromagnetic Environmental Effects and Spectrum Certification Guidance for the Acquisition Process
MIL-STD-331	Fuze and Fuze Components, Environmental and Performance Tests for
MIL-STD-461	Interface Standard, Requirements for the Control of Electromagnetic Interference Characteristics of Subsystems and Equipment
MIL-STD-464	Electromagnetic Environmental Effects, Requirements for Systems
MIL-STD-1316	Fuze Design, Safety Criteria for
MIL-STD-1377	Effectiveness of Cable, Connector, and Weapon Enclosure Shielding and Filters in Precluding Hazards of Electromagnetic Radiation to Ordnance; Measurement

(Copies of the above standards are available from the DoD Single Stock Point, 700 Robbins Avenue, Building 4D, Philadelphia, PA 19111-5094, tel: 215-691-2179).

2.2.2 Other Government Documents and Publications

The following Government publications form a part of this document to the extent specified herein.

Department of Defense

AD 1115	Electromagnetic Compatibility Design Guide for Avionics and Related Ground Support Equipment

ADS-37A-PRF	Aeronautical Design Standard, E3 Performance and Verification Requirements (Aviation and Missile Command Report)
DoDI 6055.11	Protection of DoD Personnel from Exposure to Radio Frequency Radiation and Military-Exempt Lasers
Joint Chiefs of Staff (JCS) Pub. No.1-02	Department of Defense Dictionary of Military and Associated Terms
NAVSEA OD 30393	Design Principles and Practices for Controlling Hazards of Electromagnetic Radiation to Ordnance
NAVSEA OP-3565/ NAVAIR 16-1-529/ SPAWAR 0967-LP-624-6010	Volume I - Technical Manual, Electromagnetic Radiation Hazards (Hazards to Personnel, Fuel, and other Flammable Material) Volume II - Technical Manual, Electromagnetic Radiation Hazards (Hazards to Ordnance)
TR-RD-TE-97-01	EM Effects Criteria and Guidelines for EMRH, EMRO, Lightning Effects, ESD, EMP and EMI Testing of US Army Missile Systems (Redstone Technical Test Center Report)

(Copies of DoD Directives, Instructions, and Regulations are available from the DoD Single Stock Point, 700 Robbins Avenue, Building 4D, Philadelphia, PA 19111-5094, tel: 215-691-2179. Copies of DoD documents are available from the Standardization Documents Order Desk, Building 4D, 700 Robbins Avenue, Philadelphia, PA 19111-5094. Copies of NAVSEA documents available from Commanding Officer, Naval Surface Warfare Center, Port Hueneme Division, Naval Sea Data Support Activity (Code 5700), Department of the Navy, Port Hueneme, CA 93043.) Copies of ADS-37A-PRF are available from the Army Aviation and Missile Command, ATTN: AMSAM-RD-AE-S, Building 4488, Redstone Arsenal, AL 35898. Copies of TR-RD-TE-97-01 are available from the U.S. Army Redstone Technical Test Center, ATTN: CSTE-DTC-RT-E-EM, Building 8975, Redstone Arsenal, AL 35898-8052. Copies of AD 1115 are available from Commander, Naval Surface Warfare Center, Dahlgren Division, 17320 Dahlgren Road, Dahlgren, VA 22448-5100.

2.3 Non-Government Documents

The following documents form a part of this document to the extent specified herein.

American National Standards Institute (ANSI)

ANSI/IEEE C63.14	Standard Dictionary for Technologies of Electromagnetic Compatibility (EMC), Electromagnetic Pulse (EMP), and Electrostatic Discharge (ESD)

(ANSI/IEEE documents are generally available for reference from libraries. They are also distributed among non-Government standards bodies and Federal Agencies. Copies may be

purchased from the Institute of Electrical and Electronics Engineers (IEEE), 445 Hoes Lane, P. O. Box 1331, Piscataway, NJ 08855-1311, tel: 800-701-4333 or fax: 732-981-9667. Copies are also available on: http://standards.ieee.org.)

This page left intentionally blank.

3. DEFINITIONS

3.1 Acronyms

The acronyms used in this handbook are defined as follows:

af	-	Audio Frequency
AFB	-	Air Force Base
AFD	-	Arm/Fire Device
AM	-	Amplitude Modulation
AUR	-	All-Up Round
BW	-	Bridgewire
CIWS	-	Close-In Weapon System
CRT	-	Cathode Ray Tube
CW	-	Continuous Wave
dB	-	Decibel
dc	-	Direct Current
DoD	-	Department of Defense
DODIC	-	Department of Defense Identification Code
EBW	-	Exploding Bridgewire
E3	-	Electromagnetic Environmental Effects
EC	-	Equipment Characteristics
EC/S	-	Equipment Characteristics Space
EDM	-	Engineering Development Model
EFI	-	Exploding Foil Initiator
EID	-	Electrically Initiated Device
EM	-	Electromagnetic
EMC	-	Electromagnetic Compatibility
EMCON	-	Emission Control
EME	-	Electromagnetic Environment
EMI	-	Electromagnetic Interference
EMP	-	Electromagnetic Pulse
EMRADHAZ	-	Electromagnetic Radiation Hazard
EMRO	-	Electromagnetic Radiation Operational
EMV	-	Electromagnetic Vulnerability
ESAD	-	Electronic Safe & Arm Device
ESAF	-	Electronic Safe, Arm, and Fire
FCF	-	Firing Consequence Factor
FM	-	Frequency Modulation
FS	-	Field Strength
GHz	-	Gigahertz
HBW	-	Hot Bridgewire
HERF	-	Hazards of Electromagnetic Radiation to Fuel
HERO	-	Hazards of Electromagnetic Radiation to Ordnance
HERP	-	Hazards of Electromagnetic Radiation to Personnel
HF	-	High Frequency

I/CC	-	Induced/Contact Currents
IMI	-	Intermodulation Interference
JOERAD	-	Joint Spectrum Center Ordnance E3 Risk Assessment Database
JSC	-	Joint Spectrum Center
kHz	-	kilohertz
kV	-	kilovolt
LCD	-	Liquid Crystal Display
LE	-	Lightning Effects
LED	-	Light Emitting Diode
MAE	-	Maximum Allowable Environment
MDC	-	Minimum Detectable Current
MF	-	Multiplying Factor
MHz	-	Megahertz
MNFC	-	Maximum No-Fire Current
MNFP	-	Maximum No-Fire Power
MNFS	-	Maximum No-Fire Stimulus
MNFV	-	Maximum No-Fire Voltage
NALC	-	Navy Ammunition Logistic Code
NOSSA	-	Naval Ordnance Safety and Security Activity
NSN	-	National Stock Number
P/FM	-	Pass/Fail Margin
P/N	-	Part Number
PEL	-	Permissible Exposure Limit
POE	-	Point of Entry
PPE	-	Personal Protective Equipment
PM	-	Pulse Modulation/Program Manager
RF	-	Radio Frequency
S&A	-	Safe & Arm
SOP	-	Standard Operating Procedure
SUT	-	System Under Test
S4	-	Stockpile-to-Safe Separation Sequence
T/S	-	Transportation/Storage
UHF	-	Ultra High Frequency
VHF	-	Very High Frequency

3.2 Definitions

Many of the terms in this handbook are defined in Joint Publication 1-02, MIL-STD-464, MIL-HDBK-237, DoDI 6055.11, and ANSI/IEEE C63.14. The definitions given below are either not found in the referenced publications, or have been included for the convenience of the user. In some cases they have been expanded from the referenced publication to make them specific to this handbook. For definitions extracted verbatim, the source document has been cited.

3.2.1 Dudding

Dudding is the inability of the EID to function as intended because the physical or electrical

properties have been altered due to the application or repeated application of energy below that required to initiate the device.

3.2.2 Electrically Initiated Device (EID)

An EID is a single unit, device, or subassembly that uses electrical energy to produce an explosive, pyrotechnic, thermal, or mechanical output. Examples include: electroexplosive devices (such as hot bridgewire, semiconductor bridge, carbon bridge, and conductive composition), exploding foil initiators, laser initiators, burn wires, and fusible links.

3.2.3 Electromagnetic Environment (EME)

The EME is the resulting product of the power and time distribution, within various frequency ranges, and includes the radiated and conducted electromagnetic emission levels that may be encountered. It is the totality of electromagnetic energy, from man made and natural sources, to which a platform/system, or subsystem/equipment will be exposed within any domain, that is, land, air, space, and sea, while performing its intended mission throughout its operational life cycle (in the case of ordnance, during its stockpile-to-safe separation sequence). When defined, the EME will be for a particular time and place. Specific equipment characteristics, such as operating frequencies, emitter power levels, and receiver sensitivity, operational factors such as distances between items and force structure, and frequency coordination all contribute to the EME. In addition, transient emissions and their associated rise and fall times such as from EMP, lightning, and p-static also contribute. (MIL-HDBK-237)

3.2.4 Electromagnetic Environmental Effects (E3)

E3 is the impact of the EME upon the operational capability of military forces, equipment, systems, and platforms. It encompasses all electromagnetic disciplines, including electromagnetic compatibility (EMC)/electromagnetic interference (EMI); electromagnetic vulnerability (EMV); electromagnetic pulse (EMP); electronic protection (EP); hazards of electromagnetic radiation to personnel (HERP), ordnance (HERO), and volatile materials such as fuel (HERF); and the natural phenomena effects of lightning and precipitation static (p-static).

3.2.5 Hazards of Electromagnetic Radiation to Ordnance (HERO)

The situations in which transmitting equipment (for example, radios, radar, electronic counter-measures, electronic counter-countermeasures, ground penetrating radar) or other electromagnetic emitting devices can generate radiation of sufficient magnitude to: induce or otherwise couple electromagnetic energy sufficient to exceed specified safety and/or reliability margins in EIDs contained within the ordnance, or cause radiation-induced damage or degradation of performance in ordnance containing EIDs.

3.2.6 HERO Margins

HERO margin is the difference between the maximum no-fire stimulus and the permissible EID response level. For EIDs with a safety consequence, the margin is 16.5 decibels (dB); for

EIDs with a reliability consequence, the margin is 6 dB.

3.2.7 Margin

Margin is the difference between the subsystem and equipment electromagnetic strength level and the subsystem and equipment stress level caused by electromagnetic coupling at the system level. Margins are normally expressed as a ratio in dB. (MIL-STD-464)

3.2.8 Maximum Allowable Environment (MAE)

The highest radiated field-strength levels to which ordnance can be exposed without exceeding EID HERO margins.

3.2.9 Maximum No-Fire Current (MNFC)

The maximum no-fire current (MNFC) is the maximum no-fire stimulus applicable to EIDs whose normal performance is specified in terms of current.

3.2.10 Maximum No-Fire Stimulus (MNFS)

The maximum no-fire stimulus (MNFS) is the greatest firing stimulus that does not cause initiation within five minutes of more than 0.1% of all electric initiators of a given design at a confidence level of 95%. When determining maximum no-fire stimulus for electric initiators with a delay element or with a response time of more than five minutes, the firing stimulus shall be applied for the time normally required for actuation. (MIL-STD-464)

3.2.11 Ordnance

Explosives, chemicals, pyrotechnics, and similar stores (such as bombs, guns, and ammunitions, flares, smoke and napalm) carried on an airborne, sea, space, or ground system.

3.2.12 Ordnance Configurations

The physical configurations assumed by the ordnance and its host platform/systems and associated ancillary equipment throughout the operational stockpile-to-safe separation sequence. In this document, these physical configurations are considered to be systems.

3.2.13 Presence

The sequence of operations in the stockpile-to-safe separation scenario wherein the ordnance or munitions is static, for example not handled by individuals, but rather staged or racked to, or installed on, or attached to the host platform with all handling and loading procedures completed.

3.2.14 Reliability Consequence

The inadvertent actuation of an EID that does not result in a safety consequence, but degrades system performance or renders the ordnance item either ineffective or unusable. An example of this would be the radio frequency (RF) initiation of a detonator in a fuze whose safe and arm (S&A) device is mechanically out-of-line with the explosive train. Another example of an EID with a reliability consequence is an electrically initiated match in a thermal battery. When this electrically initiated match is activated, it simply initiates the chemical process to stimulate the battery. Dudding is considered to be a reliability consequence.

3.2.15 Response Time

The response time is the time required for the EID output to increase from 10 to 90 percent of its final value in response to a step-function input.

3.2.16 Safe Ordnance Separation Distance

The safe ordnance separation distance is the minimum distance between the host platform/system and the ordnance in its post launch phase, beyond which the hazards to the ordnance delivery system and its personnel resulting from the functioning of the ordnance are acceptable.

3.2.17 Safety Consequence (hard)

A safety consequence (hard) is the inadvertent actuation of an EID that creates an immediate catastrophic event that has the potential to either destroy equipment or to injure personnel, such as the firing of an inline rocket motor igniter by RF energy

3.2.18 Safety Consequence (soft)

A safety consequence (soft) is the inadvertent actuation of an EID that does not create an immediate catastrophic event, but does increase the probability of a future catastrophic event by removing or otherwise disabling a safety feature of the ordnance item. This, for example, might be caused by the RF initiation of a piston actuator that removes a lock on the S&A rotor of an artillery fuze, thus allowing a sensitive detonator to rotate in-line with the explosive train.

3.2.19 Stockpile-to-Safe Separation Sequence (S4)

The progressive stages (phases) that begin at the time the ordnance is manufactured and continue until it is expended or reaches a safe distance from the launch vehicle/platform/system. This progression is sometimes referred to as the stockpile-to-safe separation sequence and may consist of up to the following six distinct stages:

a. Transportation/storage - The phase in which the ordnance is packaged, containerized, or otherwise prepared for shipping or stored in an authorized magazine area. This includes transporting the ordnance.

b. Assembly/disassembly - The phase involving all operations required for ordnance build-up and/or breakdown and typically involves personnel.

c. Staged - The phase in which the ordnance has been prepared for loading and is pre-positioned in a designated staging area.

d. Handling/loading - The phase in which physical contact is made between the ordnance item and personnel, metal objects or structures during the process of preparing, checking out, performing built-in tests, programming/reprogramming, installing, or attaching the ordnance item to its end-use platform/system, for example, aircraft, launcher, launch vehicle, or personnel. These procedures may involve making and/or breaking electrical connections, opening and closing access panels, removing/installing safety pins, shorting plugs, clips, and dust covers. This configuration also includes all operations required for unloading, that is, removing, disengaging, or repackaging the ordnance item.

e. Platform-loaded - The phase in which the ordnance item has been installed on or attached to the host platform/system and all loading procedures have been completed.

f. Immediate post-launch - The phase in which the ordnance item has been launched from its platform/system, but has not reached its safe ordnance separation distance with regard to the actuation of its explosives, pyrotechnics, or propellants.

3.2.20 SUT Operating Frequencies

Frequencies inherent to the operation of the ordnance system under test (SUT), such as computer clock frequencies, internal oscillator frequencies, and communication frequencies.

3.2.21 Thermal Stacking

Thermal stacking is the heating of the bridge wire followed by a relaxation period where some cooling occurs. After several thermal time constants, the temperature of the EID bridgewire reaches an equilibrium condition with some small temperature excursions about the equilibrium point.

4. HERO OVERVIEW

4.1 The Need for HERO Control

Technological advances have resulted in the development of extremely powerful communication and radar equipment that radiate high levels of electromagnetic (EM) energy. These advances, coupled with the trend to utilize more sensitive, low-power electronic circuits in the design of ordnance systems, perpetuate a long-standing hazard. The hazards that result from adverse interactions between the EME and the electrical initiators or initiating systems contained within ordnance systems are referred to in DoD terminology as HERO. The need for HERO control arises from a fundamental incompatibility between the EIDs or EID firing circuits contained within the ordnance and the external radiated EME that the ordnance encounters during its progression from stockpile to safe separation sequence (S4).

EIDs perform a variety of functions, such as initiating rocket motors, arming and detonating warheads, and ejecting chaff and flares. The need for HERO control arises when any of these functions occur unintentionally or prematurely because of exposure to EM energy. There are two potential forms of such unintentional, RF-induced EID response:

a. Activation of the initiating device itself by EM energy coupled directly into the device or upset of an energized firing circuit, resulting in a firing signal erroneously sent to the EID.

b. Degradation or dudding of the initiating device by EM energy coupled directly into the device.

In the first case, accidental EID activation can have negative consequences on safety (for example the premature initiation of explosive trains) or on reliability (for example, once initiated, EIDs can no longer perform their intended function, thus rendering the system incapable of performing its mission). In the second case, the presence of EM energy in an EID can alter its ignition properties without actually firing the device so the device will not function when legitimate firing stimuli are applied; most likely, this will adversely affect system reliability. The combination of severe EME levels and sensitive, insufficiently protected components/circuits can have disastrous consequences. Although the problem was recognized in the late 1950s, it has persisted even today for two reasons: first, the introduction of more powerful emitters has raised operational EME levels, and second, the use of sensitive electrically initiated systems has continued.

Today, MIL-STD-464 requires that ordnance be designed to provide sufficient protection from the EME and that its performance be verified by testing and/or by an analysis.

4.2 Approaches to Addressing the HERO Problem

Because of the varied experiences with HERO within the Services, it is not surprising that

Service-unique approaches have evolved over time to deal with HERO problems. Army, Navy, and Air Force HERO programs reflect fundamental differences in the perception of the problem's magnitude. Besides Service histories, other factors have influenced the respective HERO programs, such as the way the Services store, transport, and use ordnance, and the practical options available for minimizing hazards. For example, when operational EME levels exceed susceptibility thresholds, the Services can opt to utilize different risk reduction measures. The Army and Air Force, for example, might stipulate a minimum separation distance between the susceptible ordnance and the offending transmitter. Whereas, limited space aboard naval platform/systems might leave no other option for the Navy than to impose restrictions on the emissions of the offending transmitter(s) such as reducing the transmitter output power or limiting the antenna radiation zones.

4.2.1 Commonality

Despite differences in the way each Service manages HERO problems, there are certain essential elements that are common to all Services' HERO programs. These include the following:

a. A definition of the expected EME levels for all ordnance configurations;

b. Prescribed methods to quantify system degradation or deficiencies;

c. A process to develop and validate effective, practical "fixes" for known EM deficiencies; and

d. Establishment of operational procedures or restrictions to minimize risks when deficiencies are not corrected.

This handbook focuses primarily on element b above. The other elements are addressed in MIL-STD-464, AD 1115, ADS-37A-PRF, NAVSEA OD 30393, and OP 3565.

The basic DoD HERO requirements for design and performance verification are found in MIL-STD-464. However, each Service uses somewhat different processes to address HERO. This handbook prescribes recommended methodology and procedures that should be adopted by all test activities concerned with the planning and execution of HERO tests.

4.2.2 Program Responsibilities

There are a number of activities within each Service that are assigned various HERO program responsibilities. These responsibilities include both administrative and technical aspects of the program. Activities with assigned technical roles are generally concerned with determining whether the system design is adequate to satisfy the electromagnetic environmental effects (E3) requirements of MIL-STD-464. This is most often accomplished by Government-controlled tests at Government-operated test facilities. The purpose of certification is to ensure that the ordnance will operate safely within the EME levels anticipated during the service life of the ordnance, and that any susceptibilities are quantified and documented. Table 1 identifies key

Army, Navy, and Air Force activities, along with their respective responsibilities in each Service's HERO program. (See MIL-HDBK-237 for additional guidance.)

TABLE 1. DoD Commands Concerned with HERO

Service	Facility	Location	Responsibilities
Army	Army Aviation and Missile Command	Redstone Arsenal, AL	Aircraft
	Redstone Technical Test Center	Redstone Arsenal, AL	Missiles, ground vehicles
	Army Armament Research, Development and Engineering Center	Picatinny Arsenal, NJ	Fuzes, rounds, mines, simulators, infantry ordnance
	White Sands Missile Range	White Sands, NM	Missiles, ground vehicles
Navy	Naval Surface Warfare Center, Dahlgren Division	Dahlgren, VA	All Navy and Marine Corps ordnance items
	Naval Ordnance Safety and Security Activity (NOSSA)	Indian Head, MD	HERO Program Manager
Air Force	Eglin Air Force Base	Eglin AFB, FL	All AF ordnance items
	Warner Robins Air Force Base	Warner Robins AFB, GA	Rotary wing aircraft
	Wright-Patterson Air Force Base	Wright-Patterson AFB, OH	Fixed wing aircraft

4.3 HERO Assessments

A HERO test is conducted to determine if exposure of electrically initiated ordnance to specified EME levels will adversely affect the ordnance. As mentioned previously, there are several types of adverse effects. Unintentional activation of EIDs within the ordnance can result in a hazard or degraded reliability. The ordnance may be adversely affected by exposure from EME levels, whether or not power is applied to the firing circuits. Historically, the Army distinguished this non-energized problem as an Electromagnetic Radiation Hazard (EMRH). On the other hand, if power is applied, firing circuits may experience interference to the extent that erroneous firing commands are issued to the EIDs, historically referred to by the Army as Electromagnetic Radiation Operational (EMRO). However, in this handbook, the term HERO will be used henceforth to represent both cases, firing circuits that are either powered or not powered. Any distinctions between these two cases with respect to test methods, ordnance configurations, ordnance procedures, and susceptibility thresholds will be made clear in the context of the discussion.

4.3.1 Analyses

Analysis is essential during the design, development, and verification of ordnance. An analysis

can be used to assess various aspects of the hardware such as coupling of specified fields, resonance conditions, potential responses of electroexplosive circuits, and the effectiveness of potential hardening features. For an engineering design to be effective, the developer must understand the interaction and response of the hardware in the specified environments. Except in very limited cases, testing is an essential part of the verification process. Present modeling techniques cannot address all the relevant aspects of a complex coupling situation. For example, most analytical approaches are subject to inaccuracies attributed to oversimplified representations of the:

a. Ordnance physical configuration (exterior shape, aperture details, internal wiring configuration),

b. Incident electromagnetic fields, and

c. EID circuit impedance matching (coupling efficiency).

At the present time, a purely analytical approach for predicting system response is generally the exception. In other words, testing should remain an essential element of each Service's HERO program. On the other hand, testing is not without its own problems. One drawback is the practical limitation on the number of samples of parameters that simulate the test environment. For example, there are limits on the number of frequencies that can be used to simulate the operational EME. If the number of frequency samples is inadequate, the tester may fail to capture the maximum responses or resonant frequencies within a given frequency band. Despite the imperfections of the testing process, it is generally recognized as the preferred means of determining expected system performance within specified EME levels. Analytical methods are generally used in lieu of testing when tests cannot be performed due to cost or time limitations, or as "first-look" assessments to identify those ordnance configurations, procedures, and EME parameters that need to be emphasized during testing. For example, analytical models can be used during test preparation to predict system resonant frequencies, which can then be investigated during the test.

4.3.2 Test Approaches/Procedures

The general approach for HERO testing is to expose inert, instrumented ordnance to a controlled test EME and to monitor each EID contained within the ordnance for a possible response. For most EIDs, the response is quantified in terms of the magnitude of RF current induced into the heating element, or bridgewire, of the device. Measured current levels are determined as a function of selected environment parameters and, in some cases, specific test procedures used to exercise the ordnance. A common objective in all HERO testing is to determine the maximum or worst case response at each test frequency for various ordnance physical configurations. The general approach is to establish a desired test EME level at a selected test frequency and record the EID response as each of several test parameters; for example, illumination angle and polarization are varied. Specific test procedures may vary according to the type of test facility being used, for example, an open-air site, a mode-stirred chamber, or an anechoic chamber. Subsequent sections of this handbook provide details concerning the steps necessary to plan a test,

instrument the ordnance item, generate the test environment, conduct the test, and analyze the test results.

HERO testing should emphasize exposure of the ordnance to the EME levels that are associated with each S4 phase of an ordnance item (3.2.19). Figure 1 illustrates a typical progression through this sequence. Significant differences in the physical configuration of the ordnance item can be expected as the item transitions from one phase to another.

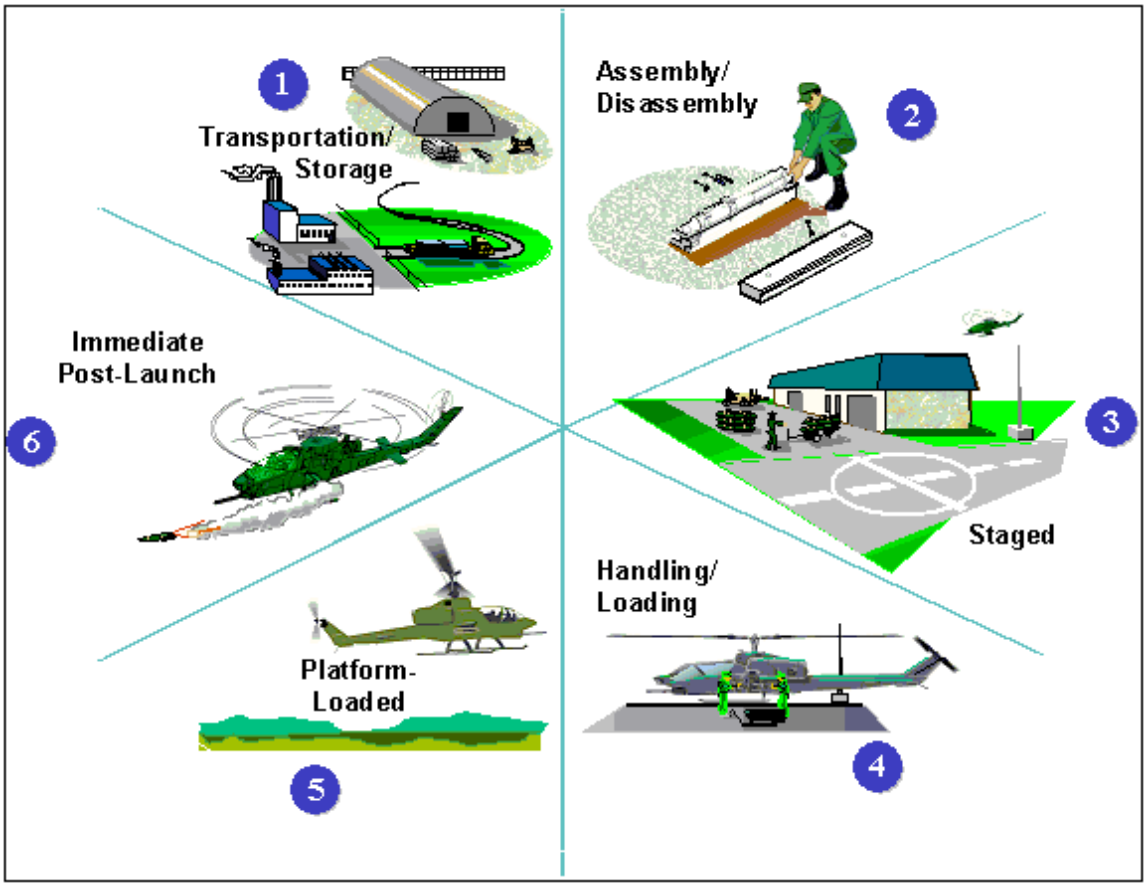

FIGURE 1. Ordnance Stockpile-to-Safe Separation Sequence

Different physical configurations can provide different levels of protection. Furthermore, it is likely that the EME associated with each phase will be quite different. For example, the EME levels associated with handling/loading operations are generally less than those encountered during certain other phases. Thus, the potential for a HERO problem is highly dependent on both of these phase-dependent conditions. From a HERO test standpoint, it is especially important to test all unique ordnance configurations. In the past, only three configurations were defined: transportation/storage, handling/loading, and presence; therefore, existing HERO databases only address these three configurations. Data entered into these databases assume the following "mapping" order: transportation/storage data map into the transportation/storage category; loading/unloading data map into the handling/ loading category; and staged, platform/ system-loaded and immediate post-launch map into the presence category.

Assembly/disassembly is not mapped into the currently defined three configurations and usually is performed in essentially a RF free area.

4.4 Data Repositories

HERO data are documented in activity test reports, which are typically provided to the individual program office that funded the test. In the case of the Navy, HERO reports are initially provided to the NOSSA. NOSSA reviews the report and, if approved, forwards it to the cognizant program office. There are some notable differences in the way each Service maintains and disseminates HERO data. The Army and Air Force typically incorporate safety-critical HERO information into individual weapon technical manuals, whereas the Navy consolidates all HERO data into a single HERO manual, OP 3565. HERO test results are also reviewed by the Navy's Weapon System Explosive Safety Review Board as a prerequisite for release for Service use. As a relatively new process, all Services now provide HERO data to the Joint Spectrum Center (JSC) for entry into a DoD-wide HERO data repository. The JSC uses these data to populate the HERO Susceptibility Module, an element of an extensive program called the JSC Ordnance E3 Risk Assessment Database (JOERAD). (See 4.5.2)

4.5 Risk Assessment/Management

New and modified systems, including associated ordnance, are subject to the E3 requirements of MIL-STD-464. There are, however, ordnance items that were introduced into the inventory in the past that were not designed to meet the latest HERO requirements in MIL-STD-464. In some cases, tests showed that these items did not demonstrate sufficient immunity to the required EME levels; in other cases, no tests were conducted, leaving the degree of hardness undetermined. In such instances, risk assessments are needed to determine what procedures or restrictions are required to minimize the risk of a HERO accident. In the most basic form, a risk assessment involves comparison of a known or assumed sensitivity, expressed as the maximum allowable environment (MAE) against the expected operational EME. If the EME levels exceed the MAE levels, there is a risk of inadvertent initiation of EIDs, with negative consequences regarding safety and/or reliability. Risk reduction measures may entail imposing emission control (EMCON) or imposing increased separation distances between the offending emitter and the susceptible ordnance to reduce the incident field level. Other protective measures or ordnance handling procedures may be necessary to reduce the susceptibility of the ordnance item.

4.5.1 EMCON Bills

HERO EMCON bills are written to specify emitter restrictions for each Navy ship and shore station when maximum operational EME levels exceed the MAEs for susceptible items at respective ordnance locations. The Navy categorizes all ordnance in terms of the relative immunity, for example, HERO SAFE ORDNANCE is designated for ordnance that can be exposed safely to EME levels as high as those specified in MIL-STD-464. HERO UNSAFE ORDNANCE and HERO SUSCEPTIBLE ORDNANCE designations are reserved for items that have known susceptibilities revealed by a test or an analysis or that have not been certified based on the HERO requirements in MIL-STD-464. The HERO EMCON bill cites each ordnance item

stored or handled aboard a ship or shore station as well as any required local emitter restrictions necessary for safe operations.

.

4.5.2 JOERAD

The JSC has developed the JOERAD software system to aid in the determination of ordnance safety for any ordnance deployed in any Joint operation. JOERAD has been developed as a tool to aid in the performance of HERO impact assessments, which are used to assist in the management of the conflict between ordnance and emitters employed in a Joint operation or exercise. JOERAD contains the capability to view, query, and maintain stored HERO susceptibility data. In the Susceptibility module, the HERO information includes identification and administration data of an ordnance item, the EID data associated with threat ordnance, and the MAE for the ordnance in a set of prescribed frequency ranges.

To aid in the risk impact assessment of ordnance, JOERAD also contains the capability to view and query nominal characteristics of emitters. The Equipment Characteristics (EC) module of JOERAD provides system, component, and antenna parameters and works in conjunction with the Susceptibility module during the impact assessment process. The EC module is a subset of the data contained in the JSC Equipment Characteristics/Space (EC/S) database, which is maintained by JSC. The complete JOERAD system contains an Integration module to further aid in the risk assessment process by comparing ordnance MAE data with the emitter data for operational platform/systems.

This page left intentionally blank.

5. TEST PLANNING

5.1 Overview

MIL-STD-464 establishes E3 interface requirements and verification criteria for systems, including associated ordnance. Both the efficiency with which a HERO verification test is conducted and the quality of the data produced depend largely on the effort that is put into the planning process. The test planner must obtain and analyze certain key information about the ordnance item. An analysis is crucial for determining how best to employ limited test resources, such as time, facilities, personnel and so forth. The process begins with the identification of the ordnance item, including all its components/subcomponents, host system, and all EIDs contained within the ordnance. Additional crucial information includes the mission profile, description of the ordnance S4 phases, and the system's physical characteristics. This information is then analyzed to determine how the test should be conducted, for example, which S4 configurations must be tested, what specific procedures are necessary to exercise the ordnance, and what test EME levels must be generated. So, in essence, the planning phase consists of gathering and evaluating information. An engineering evaluation of the information, with due consideration to test resource constraints, must then be made in order to develop a plan for accomplishing the test objectives in the most efficient manner. The ensuing paragraphs provide guidance for developing such a plan. (See Section 8 and Appendix A)

5.2 Ordnance Documentation

An important step in preparing for a HERO test is to gather certain key information; this is a prerequisite to all other steps in the preparation process. The minimum information needed is detailed below and should be included in the documentation discussed in Section 8 and Appendix A.

5.2.1 Mission

A description of the mission of the ordnance item is needed in order to understand how the item will be used throughout its service life and thus becomes the basis for determining appropriate HERO test procedures. This is the basis for selecting which S4 configurations must be tested. Furthermore, thorough knowledge of the mission is essential in selecting the test EME and in determining appropriate procedures for exercising the ordnance system-under-test (SUT).

5.2.2 Ordnance Description

Complete identification of the item to be tested is one of the most important, yet often least-emphasized aspects of test preparation. Test results cannot be properly documented nor entered into DoD HERO databases without knowledge of all of the identifiers. This may include identification at the EID at the subsystem and platform/system levels, or some combination thereof. It is essential to have the Department of Defense Identification Code (DODIC), Navy Ammunition Logistic Code (NALC), military nomenclature (for example, AGM-54, M2), part number (P/N), and National Stock Number (NSN). Reference documents, common names, and contract numbers are also helpful information. It is also important to identify all versions of the

item for which the test data are applicable. Photographs and physical descriptions of the ordnance configurations may prove extremely useful, especially if questions arise concerning which configurations were actually tested.

Associated with most configurations is a host platform/system from which the ordnance is carried and/or launched. The host platform/system, launcher, if required, and interface cables associated with a particular ordnance item can have a pronounced influence on the response of the EIDs. The ordnance combined with its platform/system configuration is distinctly different from the isolated ordnance item because of differences in the size, geometry, and interface of the constituent elements. This unique configuration can produce additional and more efficient coupling paths, especially at the lower frequencies where the increased size represents a more effective "antenna." The platform/system, whether it is an aircraft, a shipboard launcher, an armored vehicle, or a person often determines the first-order resonances of the overall configuration. Assuming that there is a path for energy to couple into the EID, the addition of a host platform/system can alter the distribution of currents in the vicinity of discontinuities on the ordnance enclosure, thereby altering the penetration into the enclosure. It is important that all designated platform/systems be included in the initial assessment. When only one platform/ system can be tested, an analysis must be conducted to determine which platform/system is expected to cause the maximum EID response, and whether conclusions from that test can be applied to other platform/systems.

A general physical description should be provided that includes overall dimensions, weight, and materials used, for example, metal, composites, plastics, and so forth.

Part of the identification task involves assuring that the ordnance item to be HERO-tested is an accurate representation of the item that will be fielded. HERO tests are normally conducted during Phase III (Production and Deployment) on first article or preproduction hardware. (See 5.4.1.1.1)

5.2.3 Associated Equipment

Additional equipment, often referred to as ancillary equipment, may be necessary to support HERO testing and should be identified during the planning phase. Such equipment is often necessary to support handling and loading operations. It is important to consider all associated equipment in the planning and evaluation processes and include such equipment since it is likely to influence the EID response. Examples include shipping containers, handling equipment (such as cranes, carts, and forklifts), special tools, and diagnostic/programming equipment. In addition, special test fixtures may be necessary to support the ordnance in a simulated post-launch configuration. (See 5.4.1.3 for additional guidance on the need for and use of ancillary equipment.)

5.2.4 S4 Description

When planning for a HERO test, it is essential to have a thorough knowledge of how the ordnance will be used throughout its service life or operational life cycle. This life cycle can be thought of in terms of the progressive stages that begin when the ordnance has been delivered to

the Government by the manufacturer and continues until it is expended or reaches a safe distance from the launch vehicle/platform/system. This progression is referred to as the S4 and is depicted in Figure 1 and defined in 3.2.19.

An ordnance item may not always have six distinct S4 phases. For instance, when a missile leaves a factory it may be completely assembled prior to delivery to its deploying activity and, therefore, assembly/disassembly procedures are not performed in a high level EME. Furthermore, from a HERO standpoint, there may not be any significant differences between some phases. Therefore, testing just one phase may be sufficient to characterize the susceptibility of the ordnance system for both phases. It is imperative that the test planner has a thorough understanding of each phase because this will define the three fundamental test parameters required to design the testing program and properly evaluate the ordnance system. The three parameters associated with each phase are: the physical configuration of the ordnance system and associated equipment, the specific operating procedures used to exercise the ordnance, and the EME that the ordnance is expected to encounter. These three test parameters must be assessed for possible HERO implications for each phase in order to determine the impact on test preparation and actual testing. (See 5.4)

5.3 Pretest Assessment

It is often possible to predict the effect that certain design features will have on an EID response. In addition, the effect of certain ordnance handling procedures is often predictable. Such predictions are valuable when planning which areas to emphasize or de-emphasize during the test. For example, it is important to identify potential points of entry for EM energy. Physical dimensions may be indicative of resonant frequencies and operating procedures that can negate protective design features. Thorough test preparation includes identification of those design features, physical characteristics, and operating procedures that can be expected to influence EID response. The test planner can then make appropriate engineering decisions concerning the test planning with respect to test EME levels and configurations procedures. Various software tools may be useful in making such response predictions. Subsequent paragraphs provide further discussion of physical and electrical characteristics relevant in the HERO test planning process, as well as tools available for response prediction.

5.3.1 EID Description and Characteristics

Collection and analysis of EID information are critical to predicting potential susceptibilities and determining instrumentation requirements. In addition to proper EID identification (P/N, NALC, DODIC, and/or NSN), the following information must be obtained and evaluated:

a. Type of EID,
b. Subcomponent containing the EID,
c. Firing sensitivity,
d. Bridgewire resistance,
e. Response time,
f. Function within the ordnance, and
g. Firing consequence (safety/reliability).

In addition, RF sensitivity data are useful if they exist. A table similar to Table 2 should be developed for each EID contained within the ordnance. Subsequent paragraphs provide an explanation of the above parameters and their impact on test preparation.

TABLE 2. EID Identification/Characteristics

Name/ Nomen-clature	NALC DODIC P/N	Type of EID	Ordnance Subsystem	Function/ Application	MNFS (amps)	BW Resist. (ohms)	Function/ Response Time (ms)	Firing Conseq.
MK 1 MOD 0 Squib	M265	BW	Rocket Motor	Motor Ignition	0.200	2-5	20	Safety

5.3.1.1 Types of EIDs

There are many different types of EIDs used in ordnance. Examples of such EIDs are a hot bridgewire, an exploding bridgewire, a semi-conductor bridge, a carbon bridge, conductive composition, exploding foil initiator, fusible link, and laser-initiated devices. The test planner should be knowledgeable about the characteristics of the different types of EIDs in order to select the proper instrumentation and to plan for the test. Table 3 provides a matrix of the most common EID types, along with some of the inherent characteristics that can have an impact on their EM susceptibility. As depicted in the Table 3, a suitable transducer is not presently available for a carbon bridge EID or a conductive composition EIDs. Evaluation of these devices must be with Go/No-Go techniques (see 5.6.5). When using temperature sensors with exploding bridgewires (non-gapped), exploding foil initiators, and fusible links, it will be necessary to establish the minimum fusing or detectable damage current in order to establish the required margins.

TABLE 3. Typical EID Characteristics

EID Type	Typical Firing Sensitivity	Typical Response Time	Instrumentation Type
Hot Bridgewire	Moderate to High	5-100 ms	Temperature Sensor
Exploding Bridgewire	Low	< 6 μs	Temperature Sensor
Carbon Bridge	High	< 1 μs	Not Available
Conductive Composition	High	μsec	Not Available
Exploding Foil Initiator	Low	< 2 μs	Temperature Sensor
Fusible Link	Low to Moderate	1-100 s	Temperature Sensor

5.3.1.2 Firing Sensitivity

The EID firing sensitivity is determined by examining the threshold initiation point when the EID is subjected to electrical stimuli, either voltage or current, and is described in terms of the maximum no-fire stimulus (MNFS). High sensitivity implies that the device is more sensitive to applied signals than most other devices, while low sensitivity implies that the device is relatively insensitive. The MNFS is determined using one of the following methods:

a. The one amp/one watt rating method where the EID should not fire within five minutes when subjecting the EID to a current of 1 amp minimum per bridge with an associated

power of 1 watt minimum per bridge. This applies to each wire of devices having dual bridgewires.

b. The statistical method where the greatest firing stimulus does not cause initiation within 5 minutes of more than 0.1 percent of all EIDs of a given design at a confidence level of 95%. When determining the MNFS for EIDs with a delay element or with a response time of more than 5 minutes, the firing stimulus should be applied for the time normally necessary for actuation. There are a number of statistical test methods that may be used to determine the MNFS of the EIDs according to the definition above.

The EID manufacturer usually determines the firing sensitivity; however, other commercial companies and military activities can perform the required assessments. It is essential that firing sensitivity data and the method used to determine the MNFS be obtained and analyzed during the planning process.

5.3.1.3 Bridgewire Resistance

The EID bridgewire resistance is required for review. Typically, the resistance is given as a range, for example 4-8 ohms or 1 $\pm$ 0.1 ohm. The variation of the resistance for a given EID can have a significant impact on the EID and must be considered, especially if there is a wide range of resistance.

5.3.1.4 Response Time

It is important that the response time for the EID be obtained and analyzed with respect to the following modulation characteristics: actual emitters expected to be encountered by the ordnance and the transmitters used to generate the test EME. This is especially important for EIDs that are very fast responding devices (in microseconds) that could respond to high-energy or peak-sensitive pulses.

An important parameter, which often does not receive adequate attention in safety evaluations, is the thermal time constant of the EID. The temperature rise of EID bridgewires to a current step can be modeled as an exponential. The time constant is the point in time on an exponential curve where the exponent equals minus one and 63% of the final temperature value has been reached. Typical time constants for bridgewire devices are between 1 and 20 milliseconds. Heating and cooling time constants are similar. Time constants are not routinely determined as standard practice.

EIDs with thermal response times less than or equal to the radar pulse width are referred to as “pulse-sensitive” or “peak power-sensitive” devices. Examples include conducting composition devices, thin film devices, and semiconductor junction devices.

When the thermal time constant of an EID is known, calculations can be made to assess responses for varying emitter parameters. If the response of an EID is known for continuous wave (CW), then a meaningful response figure for a particular pulsed emitter can be obtained by using the following multiplying factor (MF) for peak power in the pulse:

$$\text{MF} = \frac{(1-e^{-t_2/t})}{(1-e^{-t_1/t})}$$

where:

t_1 = radar pulse width
t_2 = radar pulse interval = 1/PRF (pulse repetition frequency)
τ = EID time constant

For example, if an EID with a 100 μsec time constant has a maximum no-fire power of 1 watt CW at the operating frequency of a radar with a 30 μsec pulse width and 1000 μsec pulse interval, the MF is:

$$\text{MF} = \frac{(1-e^{-1000/100})}{(1-e^{-30/100})} = 3.86$$

Therefore, the maximum no-fire level for the EID for peak pulse power is 3.86 watts. Similarly, the MF can be used with known responses from radiated fields. If the installed EID is capable of tolerating 100 mW/cm^2 for a CW field, then it is reasonable to assume it can tolerate 386 mW/ cm^2 peak power density for the particular radar. Similar calculations can be made to compare peak electric fields, voltages and currents to CW parameters; however, the square root of MF must be used to obtain correct values. If a 16.5 dB margin exists for the CW field, then the same 16.5 dB margin exists for the calculated pulsed field.

When the EID time constant is short compared to both the emitter pulse width and pulse interval, the MF approaches one as expected indicating that a single emitter pulse has the same effect as CW.

5.3.1.5 Sub-Component Containing the EID

EIDs of the same type and make may be used in different sections of the ordnance. It is important that the sub-component, for example, fuze, battery, igniter, gyro, and so forth, containing the EID be identified and recorded in the test plan. (See 8 and Appendix A.)

5.3.1.6 EID Function

EIDs may be used to perform a variety of functions within the ordnance. Some EIDs can perform more that one function; therefore, it is important to identify the function within the ordnance item/subcomponent. Examples of EID functions are rocket motor igniters, warhead detonators, explosive switches, cartridge-actuated devices, battery initiators, and cable cutters. In addition, the EID function will have a significant impact on its firing consequence.

5.3.1.7 Firing Consequence

The actuation of an EID for a given function will yield a significant firing consequence. For DoD applications, two types of firing consequences can occur:

a. Those that result in system performance degradation (a reliability consequence) and

b. Those that will result in a hazard to personnel, damage to the system, ancillary equipment, facilities, platform/systems, or will disable safety features, possibly leading to a catastrophic event (a safety consequence).

During the planning process, it is important that an analysis be performed on each EID of a given application to determine the consequence of inadvertent firing. The analysis should be performed and documented by qualified, explosive-safety personnel. In addition, when examining EID functions and firing consequences, it is essential that the associated firing circuits also be examined to fully understand the operation of the system and the impact on the firing consequence.

Safe and Arm (S&A) devices play an important role in determining the firing consequence of an EID contained in an ordnance system. Therefore, it is essential that the test preparation process include a clear description of the S&A device incorporated into the ordnance system. According to MIL-STD-1316, these S&A devices must be designed with safety features that, in most instances, preclude the existence of a hard safety consequence. One example of a hard safety consequence is the actuation of an initiator used in an S&A device with an in-line explosive train. However, initiators used in these designs require relatively high voltages to fire these devices so that they must not fire at stimuli below 500 volts, making premature initiation by EM energy highly unlikely. Most EIDs used in an S&A device are either a soft safety consequence or a reliability consequence. In some instances, an EID that is normally used to remove a safety feature in the immediate post-launch environment will dud the S&A device and the ordnance item if it is initiated prematurely.

5.3.2 Evaluation of RF-Protective Features

The following paragraphs discuss the design aspects of ordnance that should be considered when defining elements of the HERO test program, including test points. Some ordnance items have extensive protection incorporated into the design, whereas others have no protective features. When incorporated into the design, these protective features can have an effect on the test plan and, ultimately, on the testing process.

There are numerous design guides and handbooks that provide much more detailed information on EM protection techniques, as well as engineering data useful in estimating resonant frequencies and identifying potential points of entry, and so forth. These include AD 1115, ADS-37A-PRF, and NAVSEA OD 30393.

5.3.2.1 Enclosures

Enclosure shielding is one of the most important features for the protection of ordnance against incident energy. The test planner must be aware of weaknesses in the enclosure shielding integrity. Enclosure discontinuities such as seams, ports, vents, access panels, rocket motor nozzles, cathode ray tubes (CRTs), light emitting diodes/liquid crystal displays (LEDs)/(LCDs), or use of composite materials may reduce the overall shielding effectiveness of the enclosure. A

good understanding of the shielding design of the ordnance helps the test planner predict potential areas of susceptibility such as points of entry and resonant frequencies. It is important to identify types of materials and their specified and actual shielding effectiveness.

5.3.2.2 Cables and Connectors

Ordnance typically contain both power and signal cables that can act as antennas, particularly when exposed to high frequency (HF), very high frequency (VHF), and ultra high frequency (UHF) EME levels. The test planner should assess the cable shielding design to identify potential strengths and weaknesses. In doing this assessment, the planner should also consider the length of the cable, type of shield, type of connector, and connector or shield termination. Knowledge of the cable shielding design would help the test planner predict whether potential susceptibility problems may occur. In addition, the type of cable termination is extremely important because the effectiveness of shielded cables can be compromised if the shield is not peripherally terminated at the connector. It is noted that direct current (dc) bonding measurements are not an adequate means for determining the shielding effectiveness of the connector/ shield termination. MIL-STD-1377 can be used as a guide for testing suspected weaknesses in cable and connector shielding design.

5.3.2.3 Electromagnetic Interference (EMI) Gaskets

Ordnance may contain gaskets where there are shield discontinuities. The test planner should assess the gasket shielding effectiveness with respect to material properties, such as conductivity, compressibility, surface contact area and corrosion. In addition, the test planner should assess installation techniques, compression force, and material properties of the mating surfaces where the gasket will be installed [surface area, conductivity, surface preparation (paint, chemical coating)].

5.3.2.4 EMI Filters

EMI filters can be incorporated to protect signal and power lines. The test planner should determine the EMI filter type, either absorptive or reflective, and the electrical characteristics, such as frequency attenuation level and power rating. Such characteristics may indicate a potential for resonance (reflective type filters) or may indicate where protection is minimal (frequencies below which no attenuation is provided). Filtering data and the method used to derive the attenuation values should be obtained for analysis. It is noted that insertion loss measurements of individual filters using current test methodologies do not always apply once the filter has been installed in its actual application. In addition, improper installation techniques, for example, grounding method, location, can also compromise filter effectiveness. RF arcs contain components at all frequencies. Since an EMI filter is designed to preclude only high frequencies from the EME and pass low frequency firing signals, it is not capable of discriminating between the components of an arc and the intended firing signals. Therefore, special techniques must be employed to provide protection against the HERO problem caused by arcing. In general, two methods are used:

a. Provide open contacts in the firing system between the filter and the EID, or

b. Reduce the RF potential of the mating power contacts to zero prior to the final connection of the firing circuit to the ordnance item.

If either or both of these techniques are followed, the HERO test engineer will have some reasonable assurance that RF arcing will not be a problem.

5.3.3 Firing Systems

For the purposes of this handbook, a firing system consists of a power source, transmission line, and all switching circuits that are required to transfer firing energy to an EID. (See Figure 2) Because the firing system provides the path for transferring firing energy to the EID, it can also provide a path for transferring EM energy to the EID. Each element of the firing system's design should be assessed for possible weak links with respect to the overall protection scheme. This is especially true for firing circuits that require electrical connection external to the ordnance enclosure, as is generally the case.

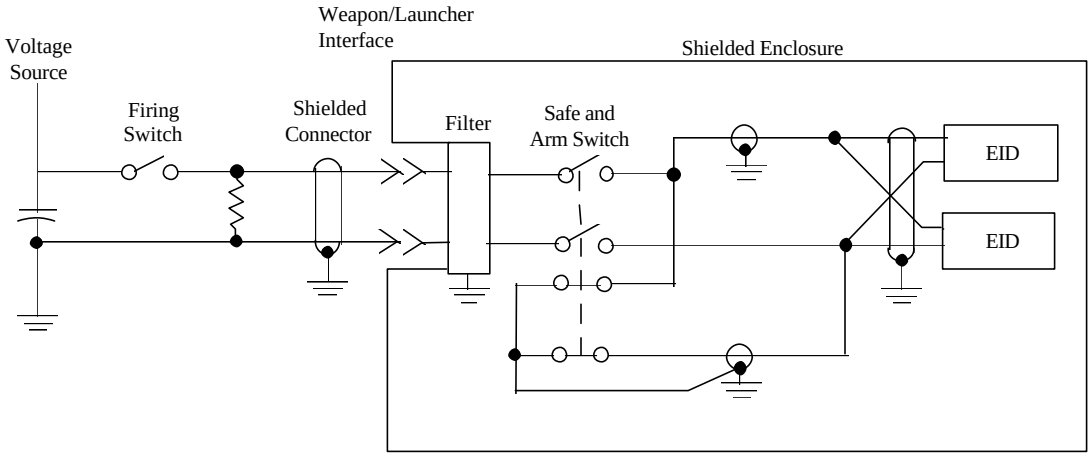

FIGURE 2. Typical HBW Firing Circuit With an S&A Device

5.3.3.1 Typical EID Circuit Design

There are two modes of unwanted excitation in an EID or in its firing circuit, the differential mode and the coaxial mode. In addition, the unwanted signal may be introduced into the ordnance and may propagate to the EID through the same path designed for the firing circuit, or it may propagate to the EID through capacitive or inductive coupling via an undesired path such as a ground loop.

Differential mode RF excitation occurs in two-wire firing circuits. EM energy propagates to the EID or its firing circuit between two wires in the same manner as does the normal ac or dc firing current. This EM energy will cause joule (resistance) heating of the bridge material, thereby causing inadvertent initiation or dudding of the EID.

Figure 3 illustrates the differential mode of excitation. In this mode, it might seem as though a large mismatch of impedance occurs between the EID or its firing circuit input and the

transmission line, which is usually the case, and therefore, most of the EM energy would be reflected at the EID or firing circuit input. Although most of the energy is reflected, enough can be coupled to the EID to cause the bridgewire to heat.

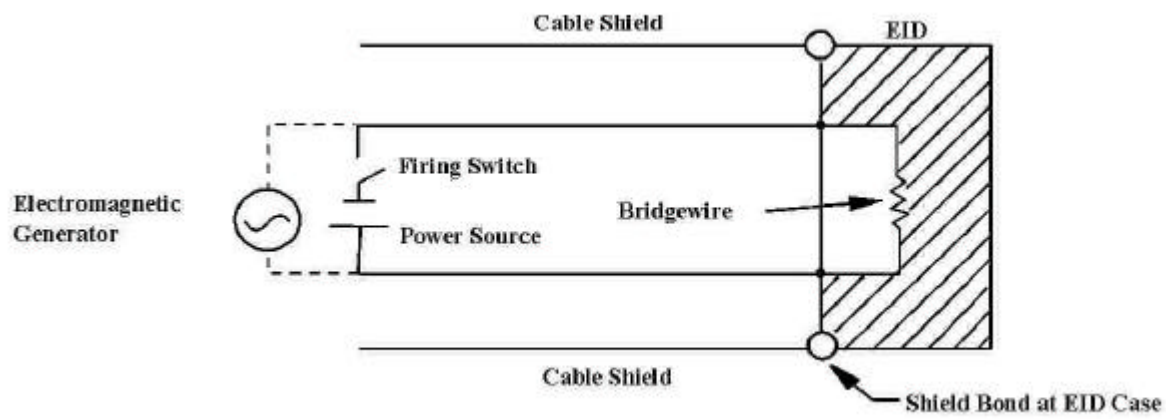

FIGURE 3. Differential Mode of RF Excitation in a Two-Wire Firing System

In a coaxial firing system, the EM energy propagates to the EID or its firing circuit along one or both legs of the normal ac or dc firing paths. The unwanted signal circuit is completed via a ground loop or capacitive/inductive coupling at the EID. This can be visualized easily by considering a wire or metal rod center conductor contained inside a cylindrical conductor, such as a shield, that is concentric with it. (See Figure 4)

The EID bridge material is connected at each end to the center and outer conductors. The unwanted signal voltage appears across the EID bridge as a result of an undesired path that occurs between the center and outer conductors, either through a ground loop or through capacitive/inductive coupling. Here again, heat in the bridgewire material is generated by energy just as the intended ac or dc firing current does.

The coaxial mode of RF excitation can also occur when using a two-wire, balanced shielded system through any high impedance connection in the shield continuity. In this case, the two lead wires serve as the center conductor and the shield serves as the outer one. (See Figure 5) In a two-wire balanced system, energy transferred to the EID in the coaxial mode will cause a high potential to be developed from the bridge through the explosive mix, to the EID case. This can cause RF arcs to occur in the explosive mix or can cause dielectric heating of the explosive mix.

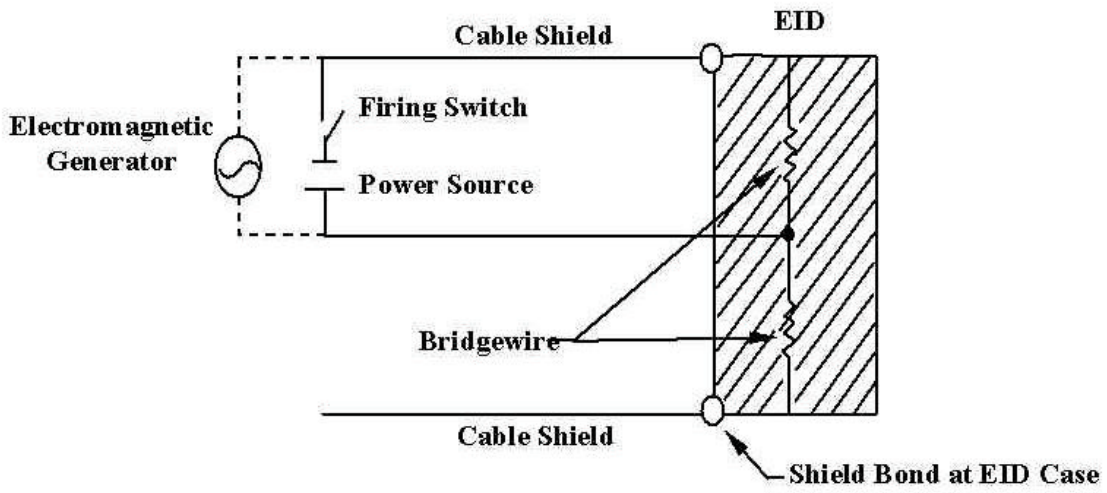

FIGURE 4. Coaxial Mode RF Excitation in a Coaxial Firing System

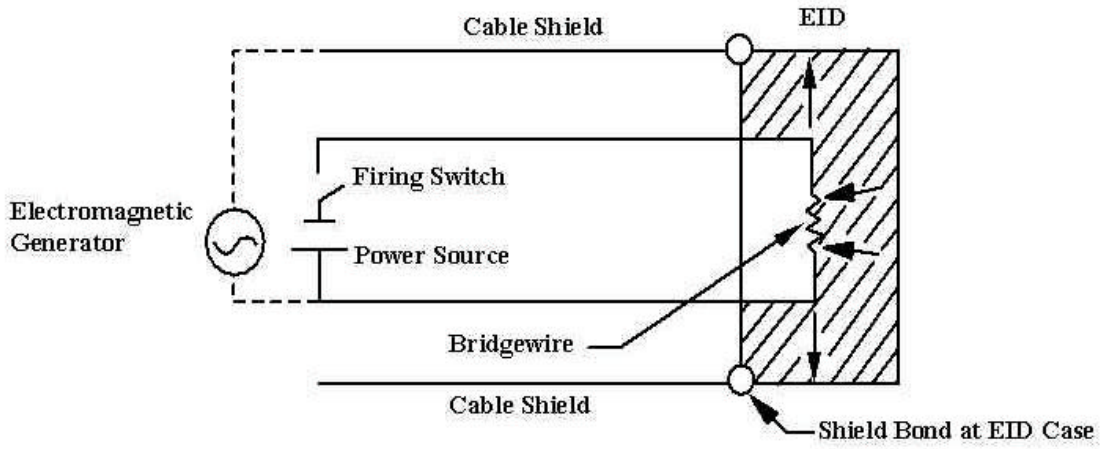

FIGURE 5. Coaxial Mode RF Excitation in a Two-Wire Firing System

5.3.3.2 Energized vs. Non-Energized Firing Circuits

HERO susceptibility thresholds, those minimum EME levels where susceptibility occurs, could vary depending on whether the ordnance is powered or not powered. Energized firing circuits may impact the coupling of energy to the EIDs by altering the electrical path by opening/closing circuits. In addition, EM energy can be coupled easily into components, relays, micro-switches, or powered firing circuits, causing energy to be applied to the EID. The test preparation process requires that the ordnance be analyzed to determine those S4 phases in which power may be applied to the EID firing circuits. This has a significant impact on the selection of the test EME, test procedures, ordnance configuration, and additional test assets. For example, if the firing

circuits are energized, both peak and average test EME levels are required to address both the fast response times of electronic firing circuits and the comparatively slow response times of the EIDs themselves. (See 5.5.1.2 for guidance on selection of EME levels, peak and average, for testing energized and non-energized circuits.)

5.3.3.3 In-Line vs. Out-of-Line Circuits/Explosive Trains

5.3.3.3.1 In-Line Circuits/Explosive Trains

An in-line EID is so called because it is always aligned with the explosive train that it is intended to initiate. Consequently, if the EID should be inadvertently initiated by EM energy, the device in which it is employed will be initiated. In some applications, such as the operation of gas generators or explosive bolts, the EID may be initiated automatically upon receipt of signals from timers or sensors that respond to stimuli experienced during the launch cycle of the ordnance system. The reliability, EM vulnerability and any potentially hazardous failure modes of the firing circuit associated timers and sensors need to be examined carefully during the test planning process.

In addition, several new types of electronic arming devices have been developed for military use. These devices are referred to as electronic safe-arm devices (ESAD) or electronic safe and fire (ESAF) devices. These devices utilize an in-line firing circuit and explosive train. Both devices have sophisticated firing schemes that usually contain a capacitor that can be charged to 2 kV to provide a relatively high-voltage firing pulse to initiate the EID. Also, these devices use very insensitive EIDs, such as exploding bridgewires (EBWs) and exploding foil initiator (EFIs) to initiate the explosive train.

5.3.3.3.2 Out-of-Line Circuits/Explosive Trains

An out-of-line EID is so called when, until armed, the EID explosive output is either misaligned with the secondary explosive train or a mechanical shutter interrupts the explosive train. Also, the EID firing circuit may contain EID-driven switches or rotors that interrupt the continuous electrical path to the power source. Mechanical shuttered systems are normally employed in conjunction with low-energy devices. Typically, this design is used in warhead fuzes or in rocket motor arm/fire devices. These devices must be thoroughly analyzed to understand the arming sequence and determine the impact of the susceptibility of the EIDs.

5.3.4 Multiple Platform/System Analysis

For ordnance used on multi-platforms/systems, the test planner should be aware that the dominant resonant frequencies are likely to be platform/system-dependent, especially at HF and VHF frequencies. An analysis should determine the “worst-case” platform/system configurations and frequencies that should be tested.

5.3.5 Response Prediction

There is value in predicting the conditions expected to stimulate the greatest EID responses.

These conditions include specific EME parameters, such as frequency, illumination angle, and polarization, the various physical configurations of the ordnance/associated equipment, and the procedures used to exercise the ordnance. Predictions are especially helpful for focusing the test where maximum responses might be expected. This is especially important when time or equipment constraints preclude testing all possible combinations of the aforementioned conditions. Predictions are also useful in prioritizing the generation of certain of these conditions, in order to increase the likelihood of detecting the greatest responses. Several tools used to make these predictions are worthy of consideration. These tools are discussed in the paragraphs below.

5.3.5.1 Results of Previous Tests

Perhaps the most useful prediction method is simply to review the results of previous HERO tests on similar items. Although there is no guarantee that the same test results will repeat themselves on the current item, trends may indicate that similar conditions are not likely to cause significant responses. For example, it has been shown that sonobuoys are rarely susceptible to HF EME levels. Recognizing this, the tester might want to complete testing at frequencies above the HF range first. It is always advisable to invest some time into researching whether test data exist on similar systems.

5.3.5.2 Analytical Prediction of Resonances

Predicting the frequencies at which EID responses exceed specified allowable levels is challenging. The purely analytical approach is complicated by the fact that the magnitude of RF currents that couple into EIDs can be influenced by the characteristics of both the outer enclosure and the internal EID cables. At microwave frequencies, ordnance enclosures are relatively large compared to the wavelength, resulting in complex internal standing-wave patterns. These field patterns are further complicated by the complex, irregular internal geometry of actual systems. It is difficult to predict the magnitude of RF currents that couple into EID cables within such environments. Finally, since the impedance mismatch between the EID and the attached cables is generally unknown, it is impossible to determine the absolute magnitudes of EID currents. However, it is relatively easy to calculate resonant frequencies associated with overall physical dimensions of the weapon/host platform/system, cables, and apertures. If the uncertainty of the interactions within the weapon enclosure is ignored, the simple resonances attributed with the physical dimensions mentioned above are reasonable candidate frequencies that may warrant investigation.

5.3.5.3 Analytical Tools

There are various software tools that can be used to predict the response of EIDs when the ordnance is exposed to defined EME levels. The MAE can be calculated if the user specifies limits on EID currents. MAE analysis programs have been developed to predict the highest field strength levels to which bridgewire-type EIDs can be exposed without exceeding established limits for EID response, and depicts the MAEs in both graphical and tabular formats. Although these programs were primarily intended for predicting MAEs in the absence of testing, they can be used as a pretest aid. The programs also provide a conservative estimate of the most

susceptible frequency and the associated MAE level for a particular ordnance configuration. The programs utilize a matched, half-wave dipole model to calculate the response of the EID of interest. EID power sensitivity, maximum no-fire power (MNFP) is first determined from the current sensitivity maximum no-fire current (MNFC) and the bridgewire resistance. Then an EID response limit is calculated based on a selected firing consequence. The programs are based on a combination of simple dipole theory and empirical data. For test planning, the output of the MAE analysis program is useful in three ways. First, the minimum MAEs are predicted for user-defined ordnance and ordnance-platform/system configurations. Frequencies where MAE levels are minimal are candidates for special attention, as are predicted resonant frequencies. Second, one might consider not testing frequencies where predicted MAEs are less than the performance requirement EME levels. Third, at frequencies where predicted MAEs are extremely low, such as less than 10 V/m, the test planner may wish to limit the magnitude of the test EME or reduce instrumentation sensitivity to prevent overstressing and risking burnout of the EID instrumentation.

5.3.5.4 Ordnance Operating Frequencies

When evaluating energized firing circuits, the operating frequencies should be considered. In some cases, it may be prudent to determine if test frequencies at or above the HF range could induce RF currents in the ordnance item's EIDs, thus causing damage to the initiators or initiating system. Operating frequencies below the HF range should be considered as modulation frequencies when establishing the external test EME. Caution should be exercised when testing in-band frequencies to avoid burnout of front-end circuits. It is advisable to begin testing receivers at low power levels and gradually increase them to higher power levels or to take steps to prevent in-band energy from damaging front-end circuits.

5.4 Test Configuration

As stated in 5.2.4, it is extremely important that the test planner identify the three fundamental parameters associated with each phase of the S4 since these parameters will ultimately drive the test requirements. Again, the three parameters associated with each phase are the following:

a. Physical configuration of the ordnance and associated equipment,

b. Specific operating procedures used to exercise the ordnance, and

c. EME for which the ordnance is expected to encounter.

These three parameters must be assessed for possible HERO implications for each phase and determine the impact on test preparation and actual testing. Each of these parameters is discussed in more detail in the ensuing paragraphs.

5.4.1 Physical Configurations

It is important that the test planner recognize that the ordnance item may be configured differently as it transitions through the various phases of its S4. Each configuration may

therefore exhibit significantly different responses to the EME, that is, may be very susceptible in one configuration, but completely unresponsive at another. The test planner should decide which configurations need to be tested. This decision is based on a pretest assessment of the protective features and weaknesses and may be influenced by data from previous HERO tests on similar items. In addition, different versions of the ordnance may have their own unique physical configurations for any or all of the phases. The test planner must therefore identify and analyze all versions of the ordnance (that is, tactical, training, telemetry, dummy, and so forth.). A comparative analysis should be performed on all versions to determine which versions must be tested.

Physical configurations include the specific configuration of the ordnance item, its launcher, host platform/system, and interface cables, as well as any associated equipment and personnel needed to support the testing. An analysis must be conducted to define what constitutes an acceptable representation of the physical configurations for each phase of the S4.

5.4.1.1 Ordnance System Under Test (SUT)

The selection of the ordnance configuration to be tested is a very important part of the planning process. The test planner must consider not only the transitional configurations of the ordnance item for the various phases of the S4 but also issues that may be related to the following:

a. Pre-production/first article versus production configuration;

b. Explosively loaded units versus inert units;

c. Tactical configurations versus training and telemetry versions; and

d. Multiple host platform/systems, launchers, interface cables, and diagnostic equipment.

5.4.1.1.1 Pre-Production/First Article vs. Production Item

The testing of prototype hardware during Phase II (System Development and Demonstration) may be necessary from a programmatic standpoint. However, HERO testing on Phase II hardware, normally considered “developmental tests”, is usually reserved for extremely complex systems where delays during Phase III cannot be tolerated due to deployment deadlines. At the conclusion of all HERO prototype testing, the test results must be analyzed to determine if further engineering is needed prior to the evaluation test of the Phase III hardware. If no design or manufacturing changes are made affecting results from the prototype tested to the pre-production model, the two versions may be deemed similar enough with respect to HERO to assume that prototype test results apply to the production version.

5.4.1.1.2 Explosively Loaded vs. Inert Test Articles

HERO tests are usually conducted using inert operational units, that is, all explosives, pyrotechnics, propellants, fuels, and chemicals have been removed and/or replaced with inert materials. On rare occasions, HERO testing may be performed using ordnance items with

explosively loaded EIDs. If explosively loaded EIDs are required for HERO testing, then standard operating procedures (SOPs) for explosives must be strictly followed. Most likely, these SOPs will be unique to each Service and/or test facility.

5.4.1.1.3 Tactical Configurations vs. Training and Telemetry Versions

A number of ordnance items, especially, missiles, rockets, and torpedoes, will have training and/or telemetry versions vs. tactical configurations. All versions of the ordnance item must be considered for HERO if they contain EIDs. In addition, the training/telemetry versions or ordnance items are often preferred for testing because they are typically inert operational units that closely resemble the tactical configuration. Again, a HERO assessment will have to be performed comparing the training/telemetry versions to the tactical configuration to determine the differences with respect to their EM susceptibility characteristics. If there are no differences with respect to HERO, then the training/telemetry versions will be deemed appropriate for testing. However, if significant differences are noted, then those versions that are different with respect to their RF susceptibility characteristics will have to be HERO tested.

5.4.1.1.4 Multiple Host Platforms, Launchers, Interface Cables, and Diagnostic Equipment

Ordnance may be authorized for use with multiple platform/systems, launchers, interface cables, and diagnostic equipment. All versions of these systems and equipment must be considered for HERO because they can have significant impact on the susceptibility of the ordnance item. Examples of multiple platform/systems would be a missile that can be launched by a human or from a tank, ground vehicle, or helicopter.

5.4.1.2 Ordnance Configurations

The following paragraphs provide discussions on the selection of the ordnance configurations for the various phases of the S4.

5.4.1.2.1 Transportation/Storage

It is important to determine the configuration of the ordnance system when it is being transported or stored. Some systems are shipped as all-up rounds (AURs), meaning they are completely assembled, while others are shipped as sections or components. It is obvious that AURs containing EIDs must be considered for HERO evaluation. However, it is not so obvious that system components containing EIDs be evaluated for HERO. Sections/components containing EIDs that are shipped and stored in individual containers must be considered for evaluation, especially if they are packaged in nonmetallic containers. Sections/components may be extremely susceptible to EME levels since their internal electronics/wiring/EIDs may be directly exposed to the EME. Evaluation of system components/sections can be very difficult and complex because, at this stage of the acquisition process, the logistics, including containers and packaging, is usually not very well defined. Nonetheless, these configurations must be evaluated as part of the overall test program, utilizing the best information available.

5.4.1.2.2 Assembly/Disassembly

Ordnance shipped as sections/components will require assembly/disassembly sometime during its deployment cycle. This usually occurs at the field activity or on board a Navy ship. The assembly/disassembly process must be reviewed to determine the components involved, the procedures to be performed, the location where the components will be assembled/disassembled and the expected EME at this location. If the expected EME at the proposed assembly/ disassembly location exceeds the approved levels for these operations or it is not a controlled environment area, then the components and procedures for assembly/disassembly must be included as part of the testing effort.

5.4.1.2.3 Handling/Loading

The handling/loading phase of the ordnance is the most crucial part of the evaluation process. Personnel contact with the ordnance item, making and breaking electrical connections, performing diagnostic tests, and attaching/removing the ordnance item from large metal structures such as launchers and platform/systems, have a pronounced impact on the EM susceptibility of the ordnance system. Often it is difficult to determine which physical configuration of the ordnance item will yield the greatest response across the frequency spectrum. When in doubt, all configurations should be tested.

5.4.1.2.4 Staged

Once the ordnance has been prepared for loading operations, it is sometimes pre-positioned in a designated area until the loading operations actually begin to occur. Usually, the designated area is not a controlled environment and, therefore, it may be exposed to high-level EME levels. In addition, the configuration of the ordnance item in the transportation/storage (T/S) phase, that is, especially those systems that are shipped as AURs in non-metal or inadequately shielded containers, is often very similar to the configuration in the staged phase and hence the two phases can be combined into one test.

5.4.1.2.5 Platform-Loaded

The physical configuration of the ordnance can be somewhat complex for this phase. The configuration will include the ordnance item, the launcher, the platform/system, and all interfaces cables, lanyards, and so forth. The firing circuits and other input cables in the test platform/system must be intact and operational. In addition, systems that have such devices such as safety pins and arm/de-arm mechanical switches that affect the EM energy coupling to the EID firing circuits must be evaluated in all appropriate positions. All platform/systems, launchers, cabling, and ordnance items must be evaluated.

5.4.1.2.6 Immediate Post-Launch

The ordnance configuration for the immediate post-launch phase may be difficult to replicate or simulate during HERO testing. This configuration is usually very different from the pre-launch

configuration because the post-launch configuration may have undergone many changes in its physical state. For example, some EIDs are no longer a concern because they have been initiated, firing circuits have been altered and may be energized, and additional apertures may have been created by the jettison of components/ sections or the extension of wings/fins. A detailed assessment must be performed to properly design the test configuration and setup. In addition, adequate test time must be allocated for this phase because it usually requires reconfiguring the test asset as well as performing the actual tests.

5.4.1.3 Ancillary Equipment

Ancillary equipment may be necessary in several of the S4 phases. For example, when planning for tests for the T/S phase, all possible types of shipping containers should be considered, especially those that are intended to provide shielding protection. If the container is non-metal and expected to provide protection, then it may be required for testing. If the container is all metal with proper joints, seams, and EMI gaskets, then it will not require testing. In some cases, the containerized configuration includes provisions for built-in tests and/or external connections to test equipment. Such configurations require testing with the test equipment connected to the ordnance item. In addition, container-handling equipment, cranes, or lifting equipment should be considered for possible “antenna” effects. Such equipment should be included in the test procedures for the T/S phase if it is determined that there is a potential impact on EID response.

Any special tools or equipment used for assembly/disassembly must be included in the test procedures because of the influence such equipment may have on the frequencies and levels of EM energy that couple into the EIDs. For the same reason, diagnostic gear, for example, continuity checkers, built-in test equipment, special tools, and loading equipment must be included in procedures for testing handling/loading configurations, if it is determined that there is a potential impact on EID response.

Loading procedures often require the use of cranes and scissors lifts, as well as other equipment that have a demonstrated influence on EID coupling. Platform-loaded configurations may also be subject to diagnostic evaluations requiring external connections and the use of special tools. Special test fixtures may be necessary to support the ordnance in a simulated post-launch configuration. Such fixtures must be designed using electrically non-conductive materials, so they do not adversely affect the EID coupling.

5.4.2 Operating Procedures

Experience has shown that procedures used to handle, load/download, diagnose, or otherwise operate the ordnance can influence the response of the EIDs. Typically, ordnance operating procedures are specified for assembly/disassembly, loading/unloading, and storage/transportation configurations. It is extremely important that these same procedures be replicated during the HERO test as the item is exposed to the test EME. The test planner should know the handling/ loading requirements. Due to the fact that handling and loading operations can have serious safety consequences, qualified personnel must be available to perform these procedures. Ordnance operating procedures may include both standard and special, non-standard (not specifically authorized) operating procedures.

5.4.2.1 Standard Operating Procedures

Ordnance SOPs are defined in technical manuals, orders, and publications and should be used to develop HERO test procedures. However, when these are not available, other documentation (such as operator's guides, manufacturer's procedures, and program office guidance) should be obtained and approved for use. When the SOPs become available, an assessment must be performed to determine the impact of any differences on the test results.

5.4.2.2 Non-Standard (not specifically authorized) Operating Procedures

Test results have demonstrated that not specifically authorized, but highly likely sequences of operation, such as personnel accidentally touching cables or connector pins with hands or coming in contact with a grounding cable or tool, can couple sufficient energy into the device to cause a safety or reliability problem. Test preparation must include the analysis and evaluation of these possibilities and ensure that such non-standard procedures are included in the test plan to assess their impact on the susceptibility of the ordnance item's EIDs to these procedures. Methods to mitigate these susceptibilities should be included in the test report. (See 8 and Appendix A)

5.4.3 Expected EME

An EME should be defined for each S4 phase. In general, it is likely that the EME levels will not be the same for all phases. For example, ordnance items with shipboard applications are likely to encounter much lower EME levels during the handling/loading phase on the flight deck than during the platform/system-loaded phase where the item will encounter much higher EME levels due to the exposure to radar main beam illumination. When test EME levels are being identified, it is important to have knowledge of the actual EME levels expected for each S4 phase.

5.5 Test EME Levels

MIL-STD-464 defines the HERO requirements, in terms of frequency and field strength levels and applies for all HERO tests. Guidance for tailoring the EME levels is included in the standard's appendix. Ordnance intended for Joint operations is to be tested to the full range of test environments, including both near field and far field conditions. Special consideration should be given to the host platform/system emitters to ensure that the test EME reflects their levels at the ordnance location. When needed an intra-platform/system evaluations should be conducted. The test environment should be restricted to prevent personnel from being exposed to hazardous levels of EM energy or contact currents. Test activities may find it difficult to achieve the specified HERO levels in MIL-STD-464, within all of the specified frequency bands.

5.5.1 EME Parameters

There are many key parameters that significantly impact ordnance response: test frequencies, field strength levels, illumination angles, polarization, and modulation. Each of these parameters is individually addressed in the following paragraphs.

5.5.1.1 Test Frequencies

There are two methods of establishing the EME test frequencies, the swept frequency technique and the discrete frequency technique. Swept, or continuous, frequency testing is the preferred technique from the standpoint that the test item is exposed to all frequencies within a particular frequency band; this improves the probability of stimulating the ordnance at resonant frequencies, where responses are greatest. If the required field intensity levels are relatively low and the test facility is capable and authorized to conduct swept frequency testing, this is an excellent way to conduct HERO tests. Mode-stirred chambers provide a highly effective means for performing swept or small-incremental frequency testing. Frequencies can be changed quickly and automatically if the RF source is computer-controlled. Even if there are significant limitations on the field intensities that can be generated, swept frequency testing may uncover resonances that would otherwise not be detected in discrete frequency testing.

However, it is generally not possible to generate the required criteria provided in MIL-STD-464 when sweeping frequencies because of limitations in equipment and/or frequency authorization in open-air test facilities. An alternative is to generate a test EME characterized by very small, incremental frequency steps. But again, practical limitations in the time required to tune high power sources generally preclude testing at finely spaced frequencies. HERO testing normally uses the discrete frequency technique in lieu of swept or fine, incremental frequency testing. Here the challenge is to generate a sufficient number of discrete frequencies to characterize the EID response within certain acceptable error margins.

There are practical limits on the amount of resources, which is time and equipment, available to capture the maximum responses. As a minimum, testing is to be performed at the frequencies shown in Table 4. These frequencies correspond to those in MIL-STD-464.

5.5.1.2 Field Strength Levels

MIL-STD-464 establishes the HERO EME requirements. Tailoring guidance is provided in Appendix A of the standard. Two field strength categories, “Unrestricted” and “Restricted” are described. The “Unrestricted” levels apply for the S4 phases, except in areas where personnel may be present, that is, assembly/disassembly and loading/unloading phases where the “Restricted” levels apply.

It may be acceptable to conduct HERO testing at levels less than those indicated in MIL-STD-464, provided certain conditions are met. (See extrapolation guidance in 7.6.1.) When testing, personnel should be concerned about limits on induced and contact current (I/CC) levels that can result from exposure to radiated environments. Practical guidance to ensure compliance with radiated PELs and I/CC limits is provided in 6.2.

During the planning phase, an evaluation of the ordnance design should be conducted to determine if it could respond to peak, as well as to average levels. This generally depends on the response time of the EID and the energized firing circuits. Initiating devices and circuits with very fast response times may respond to peak field strengths and should be tested to the peak levels; devices and circuits that respond only to average field strengths need only be tested to the

average field strengths. Energized firing circuits and EIDs with relatively fast response times, for example, conductive composition electric primers, are sometimes referred to as “peak power sensitive”; in contrast, the relatively slow bridgewire-type EIDs cannot respond to peak environments and are referred to as “average power sensitive” devices. It is important to determine if EID firing circuits can be energized in any phase of the S4 evolution, from stockpile to the point of reaching a safe ordnance separation distance. Testing the powered-on state must be accomplished at both peak and average levels. If the system is deemed likely to respond to peak levels, it will also be necessary to determine appropriate modulation parameters. (See 5.5.1.5) Table 5 summarizes the preceding discussion on EME levels, relating peak and average field requirements to EID/firing circuit response times for each of the six phases of the S4.

TABLE 4a. Test Frequencies Below 30 MHz[1]

Frequency Range (MHz)	Test Frequency (MHz)
0.010-30	0.010
	0.017
	0.029
	0.049
	0.083
	0.141
	0.240
	0.407
	0.692
	1.175
	2.00
	2.30
	2.64
	3.03
	3.48
	4.00
	4.59
	5.28
	6.06
	6.96
	8.00
	9.19
	10.56
	12.13
	13.93
	16.00
	18.38
	21.11
	24.25
	27.86

NOTES:

1. Test levels are defined in MIL-STD-464.

TABLE 4b. VHF Test Frequencies[1]

Frequency Range (MHz)	Test Frequency (MHz)
30-150	32
	34
	36
	38
	40
	43
	45
	48
	50
	53
	57
	60
	63
	67
	71
	75
	80
	84
	89
	94
	100
	115
	132
150-225	152
	174
	200

NOTES:

1. Test levels are defined in MIL-STD-464.

TABLE 4c. Test Frequencies Above 225 MHz[1]

Frequency Range (MHz)	Test Frequency (MHz)
225-400	230
	264
	303
	348
400-700	400
	438
	480
	527
	577
	632
	693
700-790	760
790-1000	833
	912
1000-2000	1000
	1155
	1335
	1543
	1783
2000-2700	2060
	2380
2700-3600	2750
	2950
	3178
3600-4000	3672
4000-5400	4243
	4902
5400-5900	5665
5900-6000	5950
6000-7900	6545
	7563

NOTES:

1. Test levels are defined in MIL-STD-464.

TABLE 4c. Test Frequencies Above 225 MHz[1]

(continued)

Frequency Range (MHz)	Test Frequency (MHz)
7900-8000	7950
8000-8400	8200
8400-8500	8500
8500-11000	9300
	10098
11000-14000	11668
	13482
14000-18000	15578
	18000
18000-40000	26500
	33000
	39000
40000-45000	43000

NOTE:

1. Test levels are defined in MIL-STD-464.

TABLE 5. HERO Test EME Levels

Stockpile-to-Safe Separation Phases	EME Levels[1]	
	Non-energized firing circuits or slow-responding EIDs	Energized firing circuits or fast-responding EIDs
Transportation/storage	Unrestricted average levels	Unrestricted peak levels[2,3]
Assembly/disassembly	Restricted average levels	Restricted peak levels
Loading/unloading	Restricted average levels	Restricted peak levels[4]
Staged	Unrestricted average levels	Unrestricted peak levels[2,3]
Platform-loaded	Unrestricted average levels	Unrestricted peak levels[2]
Immediate post-launch	Unrestricted average levels	Unrestricted peak levels[2]

NOTES:

1. Test levels are defined in MIL-STD-464.
2. Unrestricted peak levels should be used unless tailored EME levels have been developed.
3. Applies to fast-responding EIDs only.
4. Some firing circuits may be energized during the loading/unloading sequence in order to accomplish diagnostic procedures. (See 5.5.1.2)

5.5.1.3 Illumination Angles

The angle of the incident EM field has a pronounced impact on the amount of energy that couples into the EIDs. Ideally, the ordnance should be illuminated from all polar angles, as illustrated in Figure 6. However, limitations in equipment or test time may preclude such a complete illumination. Consequently, the ordnance is illuminated only at discrete angles. In these instances, modeling, engineering analysis, or previous experience with similar ordnance may be useful for predicting the illumination angles expected to induce maximum coupling.

The method of varying the illumination angle generally depends on the type of transmitting antenna being used. For fixed antennas, such as the larger antennas used at HF and VHF frequencies, the ordnance must be re-positioned with respect to the antenna. This can be done manually or with the use of a turntable. The use of a turntable facilitates 360-degree azimuth illumination, but requires that the declination angle of highly directive transmitting antennas be changed periodically and the azimuth rotation repeated. This may require changing the height of the antenna. Higher-gain, mobile antennas are highly recommended for testing above the HF band, as they can be readily moved about the system under test and adjusted for different declination angles. The use of portable antennas facilitates more thorough illumination, especially when high directivities make illumination a more critical parameter. Additional guidance for selecting discrete illumination angles is provided in 6.4.1.

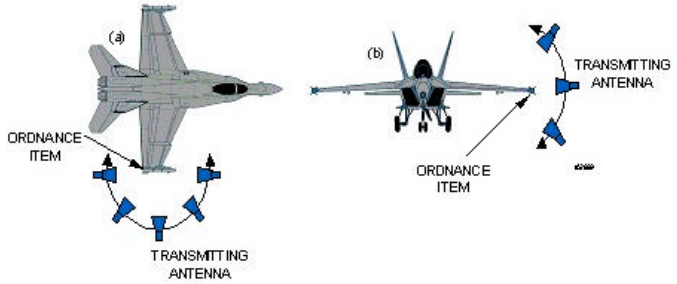

FIGURE 6. VHF and Radar Illumination Angles

No matter what methods are used to change the illumination angle, the tester should remember that these changes could have a pronounced effect on the magnitude of current induced into the EIDs. If illumination is maintained during changes in the angle of incident radiation, sufficient time must be allowed for the EID and EID instrumentation to respond fully to the changes in the induced current.

5.5.1.4 Polarization

Polarization of the test environment should be consistent with the anticipated field conditions for the ordnance. For example, for shipboard ordnance, a vertically polarized 35-foot whip antenna should be utilized in the 2 to 30 MHz frequency band in addition to a horizontally polarized antenna. Both horizontal and vertical polarization should be utilized above 30 MHz. Circular polarization is not normally utilized, but should be considered during development of the test plan. (See 8 and Appendix A).

5.5.1.5 Modulation

For most HERO testing, the average EME is the primary concern because the majority of bridgewire EIDs have relatively long response times (tens of milliseconds). Most EIDs are not very responsive to the type of short duration, peak EME levels associated with common modulation formats. In such cases, the magnitude of the induced EID current is no greater for a modulated EME than for an unmodulated CW EME, assuming the same average levels for both. Modulation may be used to conduct the test, but the EID response must be defined in terms of average field strength levels. However, there are some EIDs that exhibit extremely fast response times (fractions of a millisecond). Conductive composition primers are an example of such devices. In these instances, the EID may have a response time fast enough to react to a single pulse or, as in thermal stacking, gradually respond over time to repeated pulses, as in a pulse train. If it is determined that the EID can respond to peak EME levels for single pulses or from thermal stacking, the test EME must include the peak levels specified in MIL-STD-464. In addition, energized EID firing circuits must be assumed to have the potential to respond instantaneously, within a fraction of a microsecond or less, and must also be tested to the peak levels specified in MIL-STD-464.

The requirement for testing to peak level EME levels implies the need to choose the modulation type, for example, pulse modulation (PM), amplitude modulation (AM), frequency modulation (FM) and associated modulation parameters (pulse width, pulse repetition frequency, tone frequency, frequency deviation, and so forth). In general, modulation parameters should be chosen to represent formats that can be encountered during the ordnance S4 and to maximize the response of the EIDs and/or EID firing circuits. (See 6.4 for additional guidance.)

5.6 EID Instrumentation

There are essentially two test methods used for HERO evaluations, instrumented and non-instrumented tests. Instrumented tests are preferred over non-instrumented (Go/No-Go type) tests because instrumented tests provide a detailed quantification of the ordnance susceptibility to RF energy. Non-instrumented tests, if conducted properly, require a significant number of test items, and test time, to complete the evaluation. Otherwise, a non-instrumented test that uses very few test items and/or poor test techniques results in insufficient statistical data needed to determine compliance.

For the purposes of this handbook, this section will concentrate on instrumented testing and will provide a limited discussion on the non-instrumented testing in 5.6.5. The following paragraphs provide discussions on the various types of instrumentation systems used in ordnance testing, characteristics of an instrumentation system, the selection rationale, and other types of instrumentation used for unique non-bridgewire EIDs or firing circuits.

5.6.1 Instrumentation Characteristics

EID instrumentation is unique for HERO testing. It appears to be rather simplistic, that is, it must be capable of detecting and monitoring RF-induced responses of EIDs contained in an ordnance system. Yet, because HERO testing is complex and dynamic in nature, the

instrumentation is also complex and very challenging. In addition, there are no military standards or specifications governing the use of EIDs contained in ordnance systems. Hence, EIDs vary significantly with respect to size, sensitivity, and thermal response time. In essence, the instrumentation characteristics are as follows:

a. The sensor/transducer should be capable of detecting small changes in temperature in a device that has a small mass and, therefore, very little thermal energy associated with its temperature.

b. The instrumentation system, that is, sensor/transducer, monitoring, and recording devices, should be capable of detecting responses to short duration pulses or stimuli.

c. The sensor/transducer should not alter the firing and EM characteristics, for example, MNFS and impedance of the EID.

d. The instrumentation system should not alter the EM characteristics of the ordnance SUT.

e. The instrumentation system should not be adversely impacted or altered by the EME.

f. The instrumentation system should be capable of operating for the duration of the test.

g. The instrumentation package must be rugged, compact, and relatively simple to operate.

The following paragraphs provide discussions and guidance with respect to instrumentation sensitivity, response time, and non-perturbing effects.

5.6.1.1 Sensitivity

As general guidance, the instrumentation system should be capable of detecting a temperature rise in the EID equivalent to or less than five percent of the EID's MNFC. For instrumentation of typical hot bridgewire EIDs, sensitivity less than one percent of the MNFC is desirable and achievable with most of the instrumentation systems discussed in this section. However, the most important factor concerning the instrumentation sensitivity is that it must be sensitive enough to establish the required pass/fail margin when the system is exposed to its expected operational EME. Another important factor is that the entire instrumentation system, including the sensor, transducer, transmission technique, receiver, monitor, and recorder that will be used during the test must be considered when determining the system sensitivity.

5.6.1.2 Instrumentation System Response Time

The instrumentation system response time is defined as the time required for the instrumentation system to increase from 10 to 90 percent of its final value in response to a step function input. The instrumentation response time should be as fast as the thermal time constant of the EID being monitored. However, a response equal to or less than one-tenth of the EID thermal time constant is desired. Also, it is important to include the entire instrumentation system, for example, sensor/transducer, receiver, monitor/recorder, and A-D converter that will be used

during the test when determining the overall system response time. Controlling the rate at which the stimulus is changed can, in some cases, compensate for inadequate instrumentation response time. (See 6.4.3)

5.6.1.3 Effects of Instrumentation on SUT

It is recognized that the SUT, including the ordnance item, its launcher, aircraft, and associated firing and control cables and circuitry, when placed in an EME, can act as a receiving antenna. Its efficiency as an antenna is dependent upon many variable parameters. When these parameters satisfy certain conditions, it is possible for EM energy to be coupled into the ordnance's EIDs.

Consequently, any alterations or modifications to the ordnance, such as conductive leads or housing apertures, or the introduction of an instrumentation package, may impact the antenna efficiency. This can result in either an enhancement of the RF coupling into the ordnance item or, conversely, a decrease in the RF pickup in the ordnance's EIDs. Obviously, both of these are undesirable effects. Therefore, every effort should be made to select and implement an instrumentation package that will not impact the RF characteristics of the ordnance. The instrumented system should exhibit the same RF characteristics as the non-instrumented test article or, more appropriately, an in-service production item.

In addition, the instrumentation system should not be adversely affected by the EME. An all fiber-optic based system from sensor to receiver/recorder is the preferred instrumentation method of ordnance for HERO testing. However, the use of conductive-type instrumentation systems is acceptable, but the test engineer should be aware of the potential adverse effects and use implementation techniques that will minimize the impact on the RF characteristics of the ordnance. Examples of such techniques include the following:

a. Using twisted pairs with double over-braid shields that are terminated 360 degrees at all connector and bulkhead interfaces, and

b. Running the instrumentation cables internally and in close proximity to the internal skin of the ordnance system's enclosure body (airframe).

5.6.2 Types of Instrumentation

Instrumentation systems used in DoD HERO programs historically have been based on measuring the temperature rise in the bridgewire of an EID from which the equivalent induced RF current may be inferred. The important parameter is not the amplitude of the induced RF current, but rather the effect of the current, which is to cause a rise in the temperature of the bridgewire. In addition, EID performance has been traditionally described in terms of current; therefore, it has become the accepted practice for HERO testing to quantify the EID response in terms of current rather than temperature. Moreover, this equivalent dc current is used as a convenient point of comparison to the EID's statistical firing data that are usually given in terms of current. A typical HERO instrumentation system consists of four basic units:

a. Sensor to detect an RF-induced response,

b. Transmission line to carry the sensor data to a receiver or readout device,

c. Device to translate sensor data into desirable units of measure, and

d. Means of recording the data into a permanent record. Figures 7 and 8 provide block diagrams of the typical HERO instrumentation systems currently used in DoD HERO test programs.

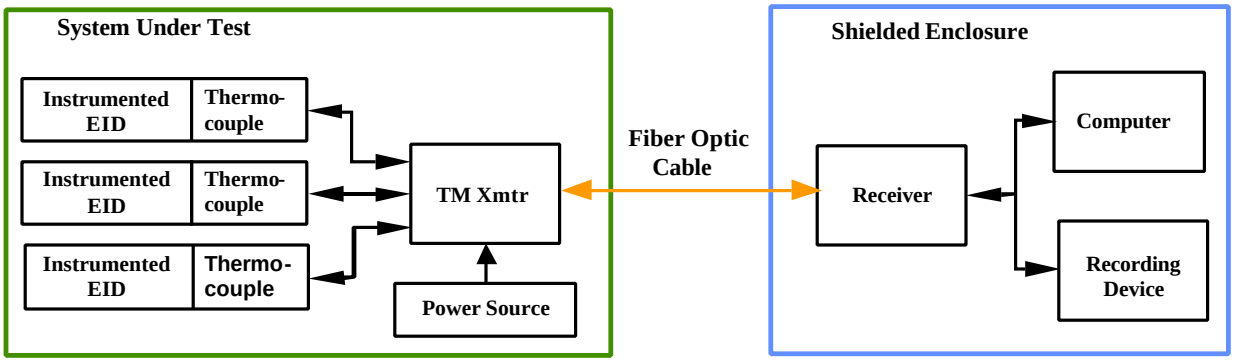

FIGURE 7. Metal-Junction Thermocouple Instrumentation for Bridgewire-Type EIDs

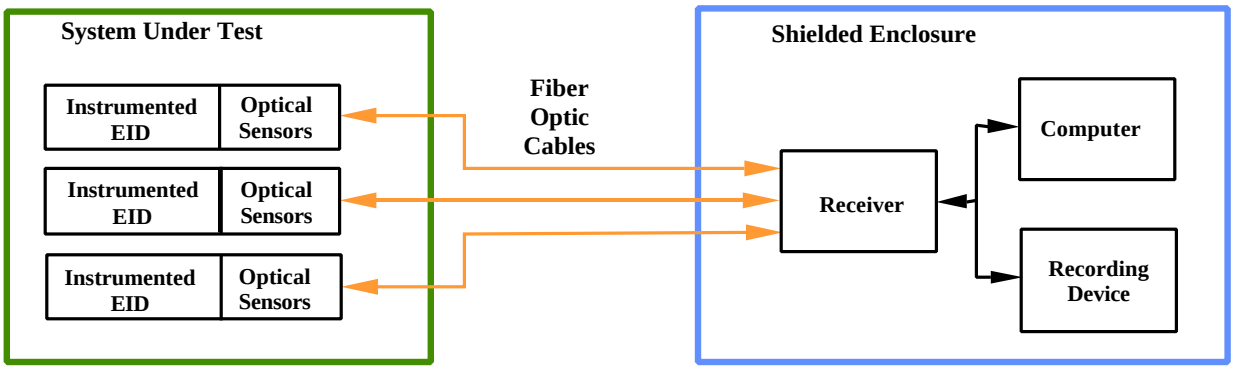

FIGURE 8. Typical Optical Sensor Instrumentation for Bridgewire-Type EIDs

5.6.2.1 Sensors and Transducers

There are a variety of sensors and transducers used to detect and measure ohmic heating of bridgewire-type EIDs. These are metal-junction thermocouples, thermopiles, optical thermocouples, phosphor-based optical sensors, and vacuum thermocouple simulated EIDs. Also, in the past, some DoD activities have performed HERO tests using thermal-sensitive

materials or wax-based instrumentation. However, this type of instrumentation is seldom used today.

These sensors and transducers can be divided into several categories and sub-categories to compare and contrast their inherent characteristics and advantages/disadvantages for HERO testing. Figures 9 through 11 provide diagrams of metal-junction thermocouple, optical thermocouple, and vacuum thermocouple/simulated EIDs.

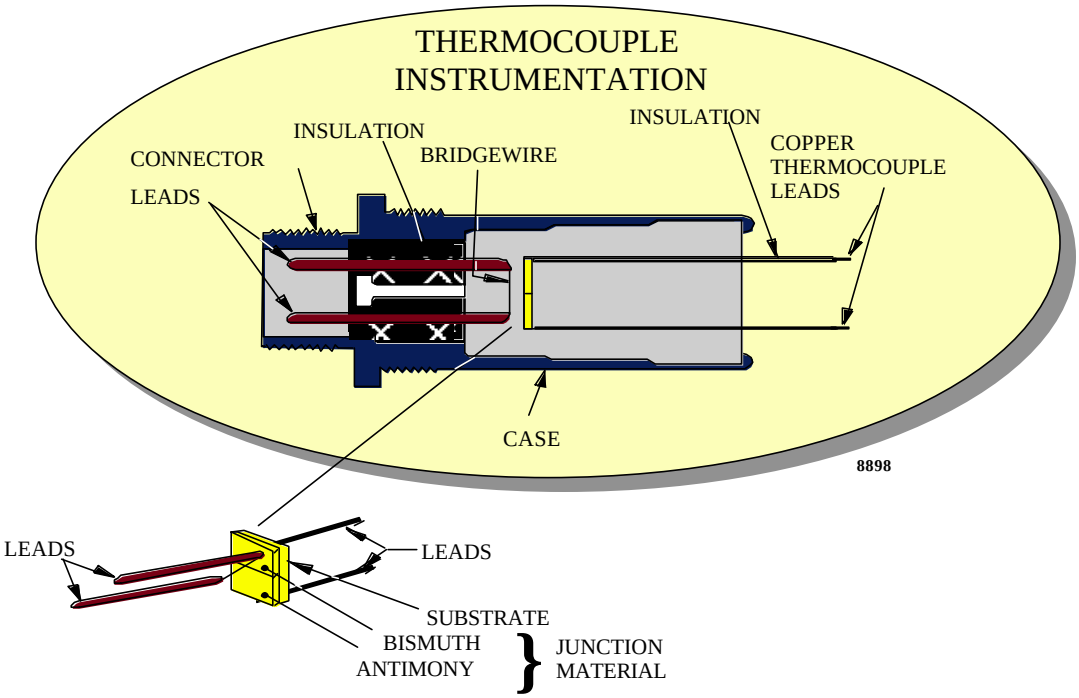

FIGURE 9. Bridgewire-type EID Instrumented With a Metal-Junction Thermocouple

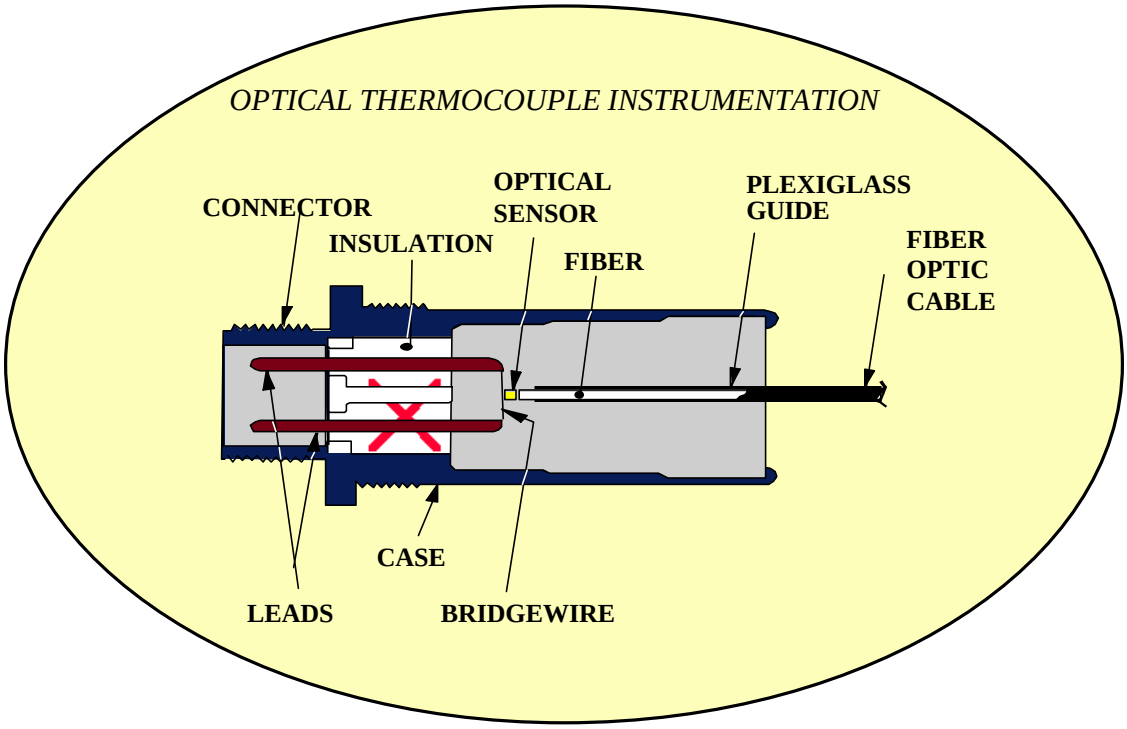

FIGURE 10. Bridgewire-Type EID Instrumented With an Optical Thermocouple

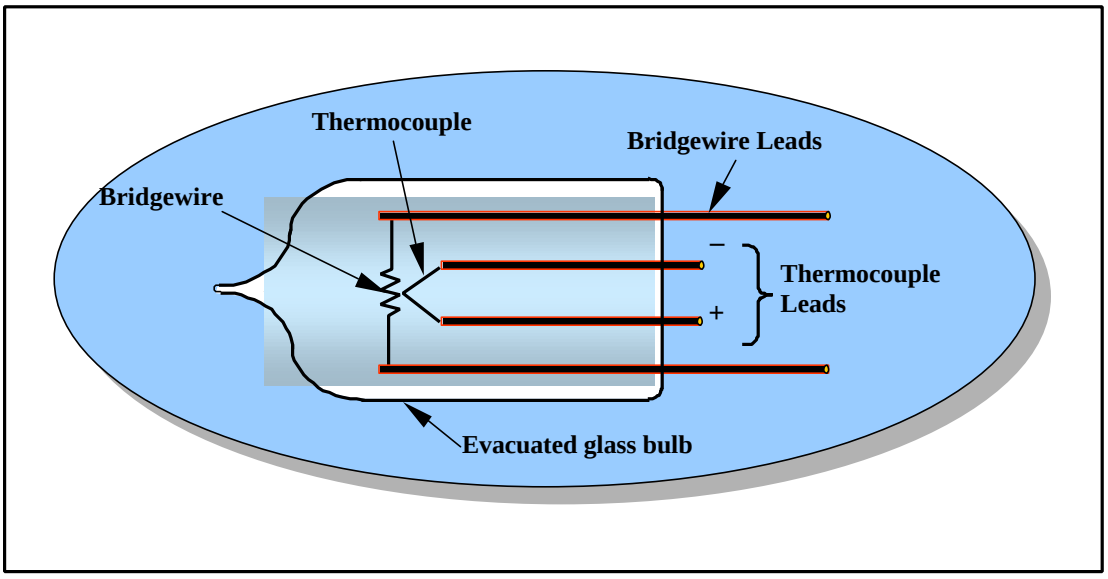

FIGURE 11. Vacuum Thermocouple/Simulated Bridgewire-Type

5.6.2.2 Actual EID vs. Substituted Devices

Sensors can be divided into two categories:

a. Those that use the actual system EIDs (inert), and

b. Those that substitute the actual EID with a simulated device.

The EM energy coupling into an EID is dependent on the impedance matching of the EID bridgewire/circuit and the ordnance system firing circuit. Those instrumentation systems that use the actual EID are preferred because it is not known how the simulated device compares to the actual characteristic impedance of the EID, especially for frequencies above 400 MHz.

5.6.2.3 Optical vs. Conductive-Type Sensors

Optical, sensor-based instrumentation systems are preferred over conductive-type sensor instrumentation systems because the potential impact on the ordnance system's RF characteristics is eliminated by the use of non-conductive instrumentation leads.

5.6.2.4 Sensor-to-Bridgewire Proximity

Some sensors are attached to or are in direct contact with, the EID's bridgewire. Others are positioned near the bridgewire (for example, within 0.003 inches). Non-conductive sensors (optical-based) can be placed in direct contact with or be attached to the bridgewire without significantly altering its inherent electrical and EM characteristics. In addition, the position of the sensor/bridgewire is more stable and is less likely to change under environmental stress. The conductive-type sensors are not normally attached to, or in contact with, the bridgewire. Special care must be taken during the sensor installation process to ensure that the conductive sensor is correctly positioned and that it is secured in place so that its position does not change under environmental stress.

5.6.2.5 Computers and Recording Devices

There are a variety of monitoring/recording devices used in HERO testing, depending on the type of sensor/transducer and data transmission device selected for the test. Several important factors are associated with the recording and monitoring equipment. First, it is important to ensure that the equipment is capable of displaying the results in real-time and that the results are displayed in units that are easily related to the EID pass/fail criteria. In addition, it is important that these devices are included as part of the instrumentation system when determining the response time and sensitivity.

5.6.3 Instrumenting Bridgewire EIDs and Ordnance

The basic steps for instrumenting ordnance for HERO tests are to minimize both the disturbance to the EM energy created by the instrumentation package and the coupling of the RF energy to the data channels. The instrumentation package should be small and internal to the ordnance item under test. Optical telemetry techniques may be used to reduce coupling of RF energy into the signal leads. For example, no external hardwire connections and no changes to the EID circuit impedance are permitted unless the impact to the circuit can be quantified and documented. The instrumentation package itself should be mounted inside the ordnance item and if power is required to operate the instrumentation it will be provided through battery packs or air turbine power generators.

Normally, HERO tests are conducted using ordnance items that have been modified to remove all explosives, pyrotechnic, and combustible materials, including EIDs. The explosively loaded EIDs are replaced with either instrumented versions of the inert EID or substituted with vacuum thermocouple simulated EIDs. The instrumented EIDs are installed in the ordnance item at precisely the same location as the original EID. The instrumentation output leads are routed to the outside of the ordnance item and routed in the instrumentation recording equipment. Implementation of HERO instrumentation (that is, disassembly/assembly of the ordnance item and installation of the replacement EIDs) may be accomplished by the ordnance item manufacturer or by trained Government personnel.

The test engineer must be aware of the potential adverse effects of adding new ports for entering and exiting the external skin or internal sections of the ordnance system. Proper EMC design techniques should be used to minimize the impact on the ordnance's EM characteristics. Examples of these techniques include the following:

a. Ensure that all conductive instrumentation components remain internal to the ordnance system.

b. When entering and exiting the ordnance system, especially a section that is considered an EMI enclosure with fiber-optic cables, use waveguide below cut-off techniques.

c. Use shielded cables and EMI connectors when passing conductive cables through bulkheads or entering/exiting the system's outer skin.

d. Keep all conductive instrumentation cables as short as possible and ensure that these cables are located next to the internal skin of the ordnance.

e. Calibrate the instrumentation system by applying a step input of direct current with a duration that is at least 10 times the thermal response time of the EID. An ammeter with at least one-half percent accuracy may be used to measure this pulse. The output of the sensor/transducer is measured and recorded. This output versus input is the calibration for the system. The calibration establishes the relationship of the step input into the EID bridgewire to the output parameter of the instrumentation. This instrumentation output value can then be related to the EID's MNFS established by the manufacturer or DoD agency. The calibration will also establish the instrumentation system's minimum sensitivity and dynamic range. There are three important factors to remember when calibrating the system:

    1) All system components (receiver, recorder, computers, and so forth) that will be used during the test and all component settings must be calibrated.

    2) The dc pulse must be inputted directly into each individual bridgewire lead or an analysis of the EID circuit must be performed to determine the amount of current applied to the particular bridgewire being monitored.

    3) Calibration data should be obtained for a minimum of five points (50, 25, 10, and

5 percent of the MNFC, and just above the MDC level). However, more calibration points will provide a better approximation of the interpolated data. These points should form a straight line when plotted on logarithmic graph paper.

5.6.4 Instrumentation/Monitoring Firing Circuits and Electronic Devices

Instrumentation for firing circuits and electronic devices will, by their very nature, be unique. Extreme care must be exercised to ensure that the instrumentation provides an accurate measurement of the voltage, current, or other response without significantly changing the test results. The primary concerns are that the shielding integrity of the circuit should not be altered by the instrumentation and that the instrumentation should not form an inadvertent antenna that may change the EM characteristics of the circuit or device under test from what would have occurred without the instrumentation installed. Instrumentation methods involving fiber-optic sensors and cables are used, almost exclusively, to achieve accurate, unperturbed measurements. (See MIL-STD-331 and TR-RD-TE-97-01 for additional details on the instrumentation and testing of electronic circuits.)

5.6.5 Non-Instrumented Testing (Go/No-Go Type)

Go/No-Go type verification tests are generally not recommended because they require a significant number of test items, test time, and high-powered EME generation equipment to properly evaluate systems and should only be performed when instrumentation is not feasible. In cases where instrumentation of the device is not feasible, reasonable results can be obtained with Go/No-Go techniques using either a safety/reliability margin verification test or a statistical sample size verification test. Both methods require that the test facility have the capability to test EME levels at or above the required EME criteria levels.

5.6.5.1 Safety/Reliability Margin Verification Test

The safety/reliability margin verification method requires exposing the SUT to EME levels that are higher than the criteria EME levels by the appropriate margin defined in MIL-STD-464. The explosively loaded EIDs will have the minimum explosives needed to represent the production EID, provide visual indication of initiation, and satisfy any safety concerns. Testing at EME levels significantly greater than the EME criteria levels can be a problem if the test facility does not have the equipment necessary to generate the higher EME test levels. For example, if the SUT has a safety concern, then the required test EME level would have to be, per MIL-STD-464, 16.5 dB greater than the EME criteria. (For example, if the EME criteria were 1000 V/m, then the required test EME level would have to be 6,683 V/m.)

In addition, test techniques become very important, especially if the SUT contains a combination of both safety and reliability EIDs. In order to satisfy the safety margin (16.5 dB) requirements, the reliability EIDs would have to be subjected to EME test levels significantly higher than the 6 dB reliability margin specified in MIL-STD-464. A possible solution to this problem is to subject the SUT to two complete test cycles. The first test cycle would be conducted to verify the reliability EIDs and the second test cycle would be conducted to verify the safety EIDs. Prior to conducting the safety margin test, the reliability EIDs should be removed and/or replaced with

impedance-matched dummy loads to avoid overexposure. This method would require a doubling of the time required for the verification test. This additional test time must be considered when planning the testing effort.

Also, a large number of EID types would be required for testing. All EIDs should be replaced after each test run for a given set of conditions, that is, frequency, test EME level, operating procedures, ordnance configuration, and so forth. This would eliminate the concern for altering the electrical/physical properties of the EID due to the repeated application of energy below that required for EID initiation.

5.6.5.2 Statistical Sample Size Verification Test

This test calls for exposure of a large number of EID samples to each set of test conditions. The number of fires to no-fires statistically demonstrates compliance with the required margins and confidence levels. Thus, many test runs will have to be performed on a number of test samples for a given set of conditions. For example, to demonstrate a reliability of 85 percent and a confidence level of 80 percent, a sample size of 10 EIDs would be required. Accordingly, the SUT would have to be subjected to 10 test runs for each set of test conditions where the EIDs are replaced with a new set of EID samples after each test run. To demonstrate compliance for the 20-mm aircraft gun system, a sample size of 5,000 (primer only, otherwise inert) 20-mm rounds was required for testing. In addition, this test method requires the test facility to be capable of generating the EME criteria levels. To reduce the test time, it would be preferable if the test facility were capable of conducting tests on many samples simultaneously.

6. CONDUCTING THE TEST

6.1 Introduction

Section 5 discussed the key elements of HERO test preparation, namely, analysis of key information, determination of test requirements, and EID instrumentation. Once these elements have been addressed and a test plan has been developed, testing can begin. This section provides guidance for conducting a HERO test. HERO certification of a "Joint" ordnance item, or certification of an item for "Joint use," poses a significant challenge to test activities previously tasked with only single-Service certification. Ordnance must meet the HERO requirements in MIL-STD-464. The test methodology assumes that the objective of Joint certification is to determine maximum EID responses for ordnance that is physically representative of actual usage and is operated or exercised with defined, standardized procedures, while being subjected to the specified HERO EME levels.

In HERO testing, safety is paramount. Safety considerations begin with an awareness of the hazards. Appropriate procedures to minimize risks must then be clearly identified. The performance of certain pretest measurements, discussed in subsequent paragraphs, may be useful for determining limits on transmitter power necessary to prevent overexposure of test personnel.

Guidance concerning the generation of test EME levels is based on creating a "worst-case" electromagnetic stimulus for the SUT. EME levels are typically defined in terms of frequency, field strength, modulation, and illumination angle, for which certain combinations will induce maximum EID responses. Each of these parameters is discussed in subsequent paragraphs.

Additional guidance is also provided to assist the test activity in determining test techniques and procedures designed to maximize EID response. Selected topics such as non-linear effects and "over-testing" are also presented.

6.2 Safety

6.2.1 Standard Operating Procedure (SOP)

A written SOP should be included as a part of the test plan (see 8 and Appendix A). The SOP is to identify the hazards associated with HERO testing and the precautions that must be taken to minimize those hazards. In general, there are two types of hazards: those related to the handling, preparation, and operation of the ordnance and it's associated platform/system/ancillary equipment, and those related to the test environment.

6.2.2 Safety Briefings

A safety briefing is normally conducted prior to the start of the test to review the SOP and familiarize all test participants with the hazards and precautionary measures. This briefing affords everyone an opportunity to gain a better understanding of the SOP, ask questions, and offer suggestions to improve safety. Daily refresher meetings are also recommended to reinforce the rules for safe operations and/or discuss safety concerns.

6.2.3 Ordnance Handling

Handling large, heavy ordnance items can be hazardous. In some cases, personnel handling ordnance must take formal training to become certified to work on specific ordnance or to operate the associated handling equipment, for example, forklifts, loading equipment, and so forth. The test director must ensure that all training/certification requirements are satisfied and documented. If formal certification is not required, the test director should instruct members of the test team on proper handling/loading/operating procedures and identify any safety hazards that may exist. Ordnance handling/loading equipment must meet all individual requirements for safety certification.

6.2.4 Permissible Exposure Limit (PEL)

The concern for possible overexposure exists whenever personnel are exposed to the test EME. HERO test directors must take steps to ensure that personnel are not exposed to EME levels that exceed the PELs specified in DoDI 6055.11. PELs are specified in terms of radiated fields and I/CCs. Experience has shown that, in the HF and VHF ranges, the I/CC PELs typically impose more restrictive conditions. In fact, it is not unusual to find I/CCs approaching the I/CC PEL value, even though radiated fields are well below the radiated PEL values. At radar frequencies, radiated PELs are generally of greater concern.

6.2.4.1 Radiated PELs

Radiated PELs are listed in Table 6 and depicted graphically in Figure 12. They are based on DoDI 6055.11.

TABLE 6. Radiated PELs for Restricted Environments.

Frequency Range (MHz)	Electric Field Strength (V/m)	Magnetic Field Strength (A/m)	Power Density (E-field, H-field) (mW/cm^2)	Averaging Time (minutes)
0.003-0.1	614	163	100, 1000000	6
0.1-3.0	614	16.3/f	100, $10000/f^2$	6
3-30	1842/f	16.3/f	$900/f^2$, $10000/f^2$	6
30-100	61.4	16.3/f	1.0, $10000/f^2$	6
100-300	61.4	0.163	1.0	6
300-3000			f/300	6
3000-15000			10	6
15000-300000			10	$616000/f^{1.2}$

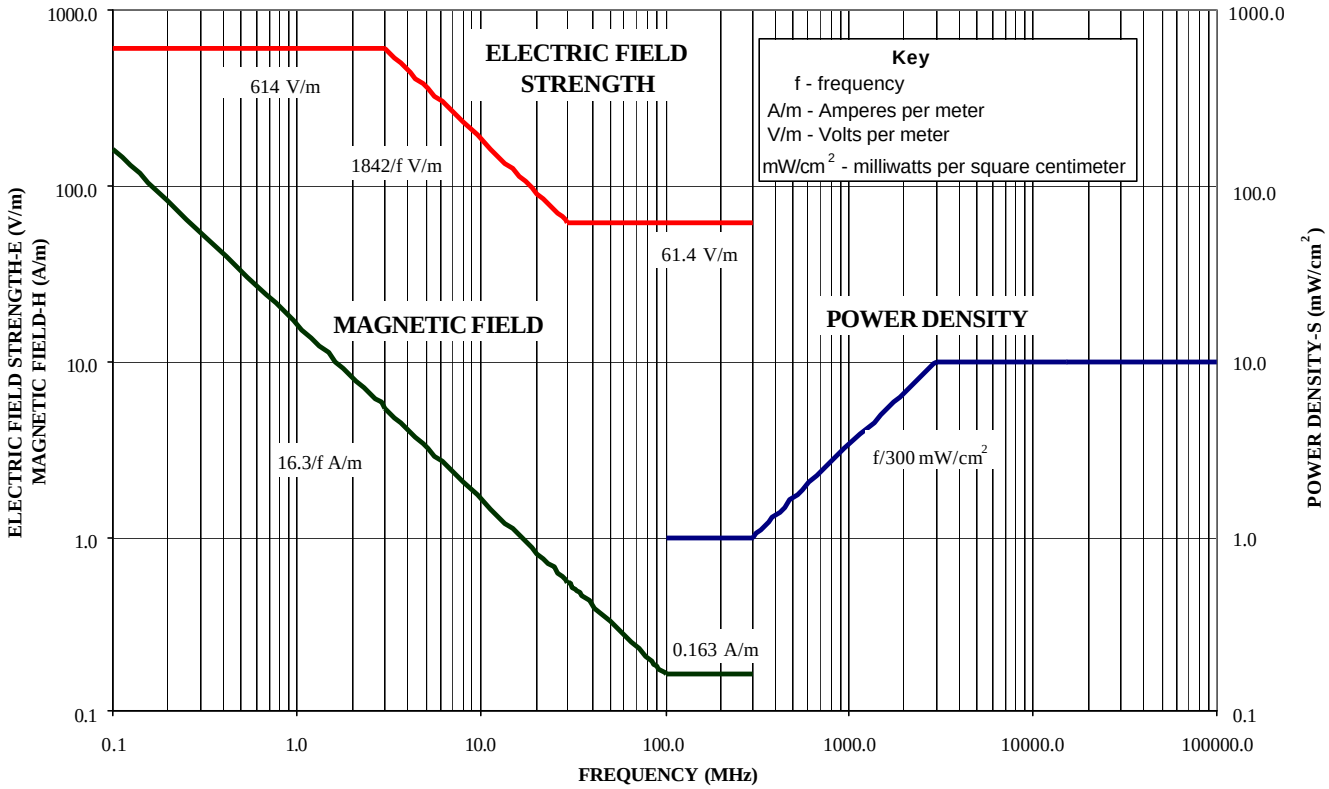

FIGURE 12. Radiated PELs for Restricted Environments

From a practical standpoint, the electric field PELs impose a greater constraint for HERO testing than the magnetic field PELs because the latter heat biologic tissue and induce internal currents less effectively than electric fields; thus, monitoring the electric field is sufficient to ensure compliance with radiated exposure limits. The radiated PELs cited in DoDI 6055.11 are for continuous exposure. Time averaging may be applied to the radiated limits, thereby allowing for higher field strengths to which personnel may be exposed; however, this requires the length of exposure time to be limited appropriately. It should be noted that some of the Restricted levels of MIL-STD-464 do exceed the continuous exposure levels. In all such cases, the duration must be limited to times determined using the following formula:

$$T_{allowed} = 6\,(FS_{PEL}/FS_{req'd})^2$$

where,

$T_{allowed}$ = time allowed (minutes),
FS_{PEL} = continuous PELs (V/m), specified in Table 6,
$FS_{req'd}$ = required field strength (V/m), specified in MIL-STD-464.

Figure 13 illustrates the maximum exposure time allowed as a function of the ratio of the required or actual test field strength to the frequency-dependent PEL value. It should be noted that when the test field strength is equal to the PEL, the exposure time is 6 minutes or 360

seconds, but decreases to as little as 3.6 seconds for field strengths that are ten times the PEL. Conversely, if the test level is less than the PEL, exposure time is unlimited.

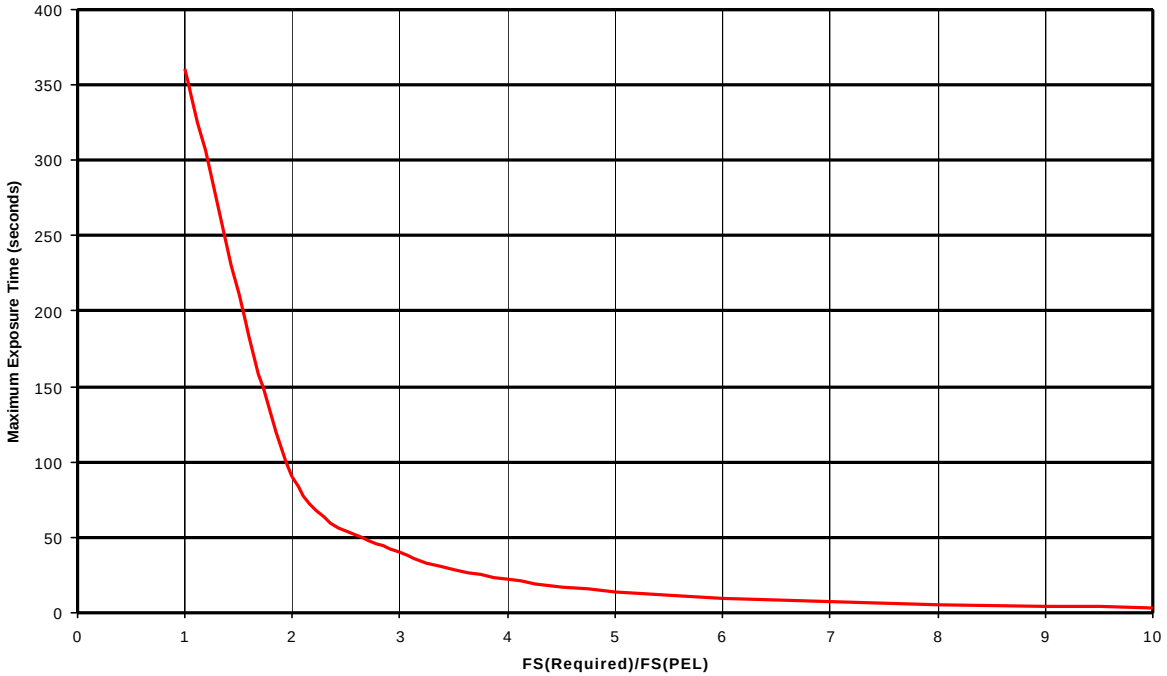

FIGURE 13. Maximum Exposure Time

6.2.4.2 I/CC PELs

Table 7 lists the applicable I/CC limits. The table, which provides the limits for I/CC resulting from exposure to radiated fields, is found in DoDI 6055.11. In addition to the applicable I/CCs levels, Table 8 lists maximum personnel exposure times for all HERO test frequencies. The possibility of exceeding these I/CC limits is greatest when personnel are conducting handling/ loading operations. Such operations typically require physical contact with large, conductive objects, for example, individual ordnance systems or associated host platform/systems/launchers.

Radiation of such large, conductive objects at HF and VHF frequencies often results in resonant conditions conducive to the flow of high RF current from the object, through the body, to ground. In addition, when large objects are exposed to HF radiation, there are enhanced regions of electric field strength in the vicinity (for example, under aircraft wings), which may increase the levels of induced body current.

TABLE 7. Induced/Contact Current Restrictions

Frequency Range (MHz)	Maximum Current Through Both Feet (mA)	Maximum Current Through Each Foot (mA)	Contact Current (mA)
0.003 – 0.1	2000f	1000f	1000f
0.1 – 100	200	100	100

TABLE 8a. Exposure and I/CC Limits for Frequencies Below 30 MHz

Frequency Range (MHz)	Test Frequency (MHz)	Maximum Exposure Time (Minutes)	I/CC PEL (mA)
0.010-30	0.010	No limit	100
	0.017	No limit	100
	0.029	No limit	100
	0.049	No limit	100
	0.083	No limit	100
	0.141	No limit	100
	0.240	No limit	100
	0.407	No limit	100
	0.692	No limit	100
	1.175	No limit	100
	2.00	No limit	100
	2.30	No limit	100
	2.64	No limit	100
	3.03	No limit	100
	3.48	No limit	100
	4.00	No limit	100
	4.59	No limit	100
	5.28	No limit	100
	6.06	No limit	100
	6.96	No limit	100
	8.00	No limit	100
	9.19	No limit	100
	10.56	No limit	100
	12.13	No limit	100
	13.93	No limit	100
	16.00	No limit	100
	18.38	6.0	100
	21.11	4.6	100
	24.25	3.5	100
	27.86	2.6	100

TABLE 8b. Exposure and I/CC Limits for VHF/UHF Frequencies

Frequency Range (MHz)	Test Frequency (MHz)	Maximum Exposure Time (Minutes)	I/CC PEL (mA)
30-150	32	No limit	100
	34	No limit	100
	36	No limit	100
	38	No limit	100
	40	No limit	100
	43	No limit	100
	45	No limit	100
	48	No limit	100
	50	No limit	100
	53	No limit	100
	57	No limit	100
	60	No limit	100
	63	No limit	100
	67	No limit	100
	71	No limit	100
	75	No limit	100
	80	No limit	100
	84	No limit	100
	89	No limit	100
	94	No limit	100
	100	No limit	100
	115	No limit	N/A
	132	No limit	N/A
150-225	152	2.3	N/A
	174	2.3	N/A
	200	2.3	N/A

TABLE 8c. Exposure and I/CC Limits for Frequencies Above 225 MHz

Frequency Range (MHz)	Test Frequency (MHz)	Maximum Exposure Time (Minutes)	I/CC PEL (mA)
225-400	230	2.3	N/A
	264	2.3	N/A
	303	2.3	N/A
	348	2.6	N/A
400-700	400	3.0	N/A
	438	3.3	N/A

TABLE 8c. Exposure and I/CC Limits for Frequencies Above 225 MHz
(continued)

Frequency Range (MHz)	Test Frequency (MHz)	Max. Exp Time (Minutes)	I/CC PEL (mA)
400-700	480	3.6	N/A
	527	4.0	N/A
	577	4.4	N/A
	632	4.8	N/A
	693	5.2	N/A
700-790	760	5.7	N/A
790-1000	833	No limit	N/A
	912	1.7	N/A
1000-2000	1000	1.9	N/A
	1155	2.2	N/A
	1335	2.5	N/A
	1543	2.9	N/A
	1783	3.4	N/A
2000-2700	2060	3.9	N/A
	2380	4.5	N/A
2700-3600	2750	5.2	N/A
	2950	5.7[1]	N/A
	3178	5.7[1]	N/A
3600-4000	3672	5.7[1]	N/A
4000-5400	4243	5.7[1]	N/A
	4902	5.7[1]	N/A
5400-5900	5665	5.7[1]	N/A
5900-6000	5950	5.7[1]	N/A
6000-7900	6545	5.7[1]	N/A
	7563	5.7[1]	N/A
7900-8000	7950	5.7[1]	N/A
8000-8400	8200	5.7[1]	N/A
8400-8500	8500	5.7[1]	N/A
8500-11000	9300	5.7[1]	N/A
	10098	5.7[1]	N/A
11000-14000	11668	5.7[1]	N/A
	13482	5.7[1]	N/A
14000-18000	15578	5.7[1]	N/A
	18000	5.7[1]	N/A
18000-40000	26500	5.7[1]	N/A
	33000	5.7[1]	N.A
	39000	5.7[1]	N/A
40000-45000	43000	5.7[1]	N/A

NOTE: 1. If the test field strength is less than 194 V/m, there is no limit on exposure time.

6.2.5 Ensuring Compliance with PELs

Care must be exercised when performing the HERO testing so as not to exceed the radiated and I/CC PELs. This can be done by limiting transmitter output power and/or by adjusting the time during which personnel are exposed to the test EME levels. In some cases, it may be necessary to tailor the HERO requirements in MIL-STD-464.

6.2.6 Operations Involving Host Platforms and Ancillary Equipment

There are a variety of hazards that may exist when working with host platform/systems or ancillary equipment such as cranes, forklifts, and other types of loading equipment. The test director must make personnel aware of these hazards and ensure that they follow the basic safety rules to avoid an accident or damage to the equipment.

6.2.7 Personal Protective Equipment (PPE)

Several types of PPE may be required during a HERO test. Each test operation must be evaluated to determine if PPE is required to provide an extra measure of protection against specific hazards. The list includes, as a minimum, hearing and eye protection, safety footwear, and RF protective clothing. Hearing protection is required when personnel are in the vicinity of operating jet turbine engines. Eye protection is required in the vicinity of rotating helicopter blades or when there is a risk of being hit by debris from live primers. Personnel working with heavy items should always wear protective footwear, such as steel-toed boots.

6.3 Generating Test EME Levels

6.3.1 Environments Below 2 MHz

Approximately 10 percent of the HERO test frequencies are in the frequency range of 0.010 to 2 MHz (See Table 4a). Testing in this range is relatively new and specialized. Accordingly, until such time as guidance is included in this handbook, guidance should be obtained from the cognizant DoD Commands listed in Table 1 of this handbook or the technical points of contact listed in 9.6.

6.3.2 HF Environment (2-30 MHz)

Approximately 20 percent of the HERO test frequencies are in the HF range. (See Table 4a) However, testing in the HF range often requires more than 20 percent of the total HERO test time, particularly for large systems or systems attached to large platform/systems. This is due to the fact that in general, EIDs are, more responsive to lower frequencies, large items tend to resonate at HF, and system cables act as relatively efficient antennas at HF frequencies. Operationally, HF environments tend to be difficult to avoid because the antennas that produce them are typically omnidirectional. Figure 14 illustrates typical antennas, transmitters, and monitoring equipment necessary to generate test EME levels. Specific aspects of HF testing are addressed in the following paragraphs.

6.3.2.1 Recommended Test Frequencies

Table 4a recommends 20 test frequencies in the HF range. As illustrated in Figure 15, the spacing of these specific frequencies is logarithmically based. The number of samples was selected on the basis of maximum quality factor (Q) or resonance bandwidth, typical of most ordnance items. The intent is to test at enough frequencies across the HF range to achieve a reasonable probability of capturing maximum responses. The recommended frequency sampling density is greatest in this frequency range, averaging 0.67 sample/MHz.

6.3.2.2 Field Strength Levels

The HF environment found on Navy flight decks was used to establish the HF Restricted test levels in MIL-STD-464. The Restricted levels are applicable to ordnance used in areas (loading/unloading and assembly/disassembly) where personnel are exposed to the EME. It should be noted that there is a restriction on the length of time personnel can be exposed at the three highest HF test frequencies. As indicated in Table 8a, time limits of 4.6, 3.5, and 2.6 minutes apply at 21.11, 24.25, and 27.86 MHz, respectively. Guidance for determining time limits at other frequencies and recommended procedures to ensure compliance with these limits is presented in 6.2.4 and 6.2.5.

6.3.2.3 Transmitting Antennas

Typically, low-gain, omnidirectional type antennas are used to generate HF test environments. In some cases, a transverse EM chamber is used; however, for Joint ordnance, a 35-foot whip is preferred. Vertical monopoles or whip antennas are most common, with variations such as conical monopoles. The type of transmitting antenna used to create the HF environment can have a pronounced impact on the response of the ordnance being tested, because of strong ordnance-antenna interactions, an expected consequence of testing within the near field of the antenna. It is noted that HF antennas “representative” of operational types should be used. In near field environments, the ordnance and antenna comprise a unique EM system, with the ordnance essentially acting as a parasitic element. Coupling efficiencies are influenced by the interactions between the ordnance (or between the ordnance/platform/system combination) and the antenna.

HF testing is usually accomplished in the near field region. In fact, it is impractical and/or undesirable to conduct HF tests in the far field for the following reasons:

a. The far field distance is, in general, a function of wavelength and antenna dimension. A conservative approximation assumes the greatest value of these three computations. There is not enough room at most facilities to accommodate the separation required for far field illumination. In the HF range, the greatest distance is typically 1.6λ (15 meters at 32 MHz to 240 meters at 2 MHz, as illustrated in Figure 16);

b. Many facilities cannot achieve the required MIL-STD-464 field strength levels at far field distances; and

c. HERO test philosophy emphasizes the importance of establishing realistic, but "worst-case" conditions (that can be assumed, for HF, to exist in the near field).

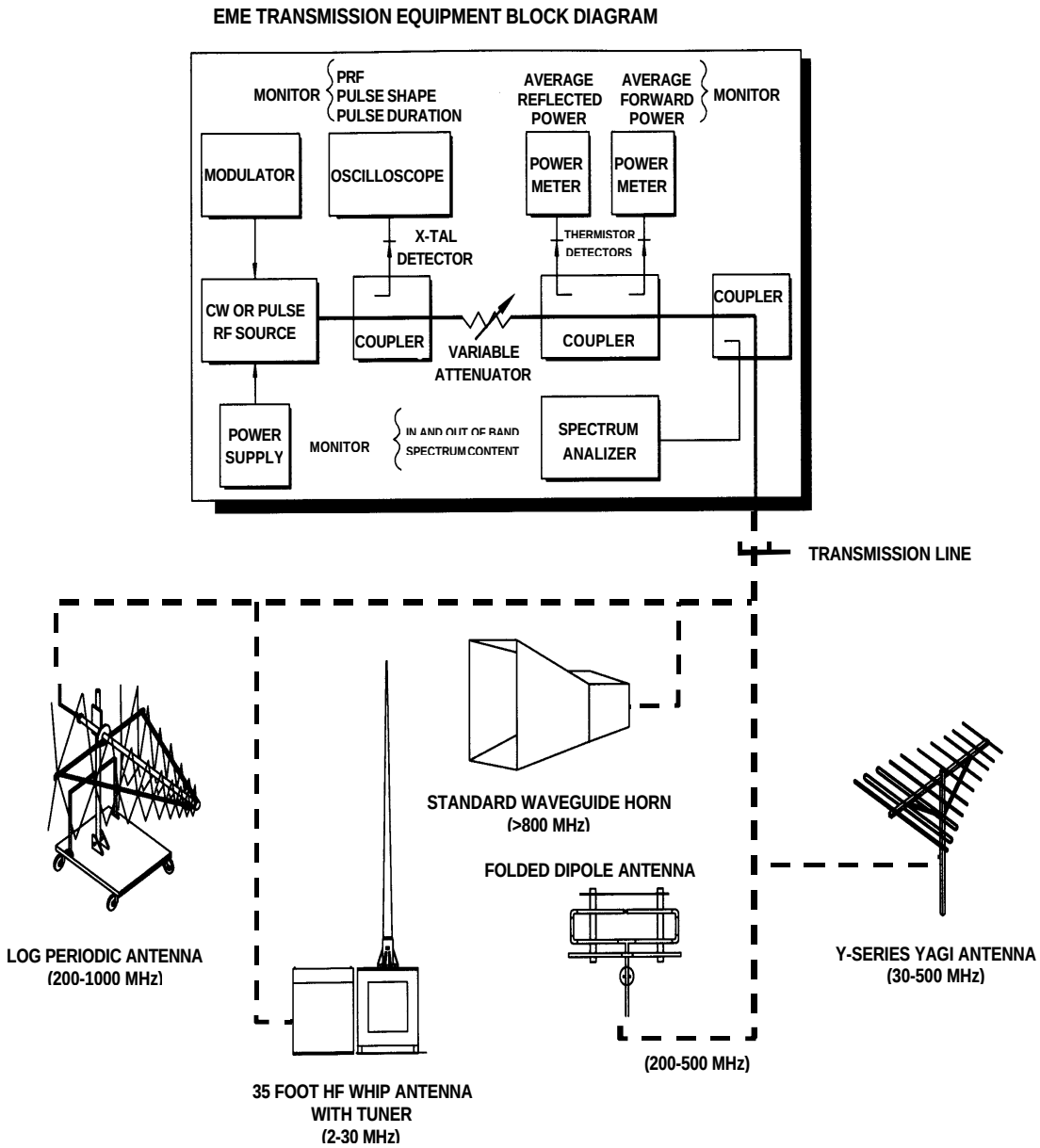

FIGURE 14. EME Transmission Equipment and Antennas Block Diagram

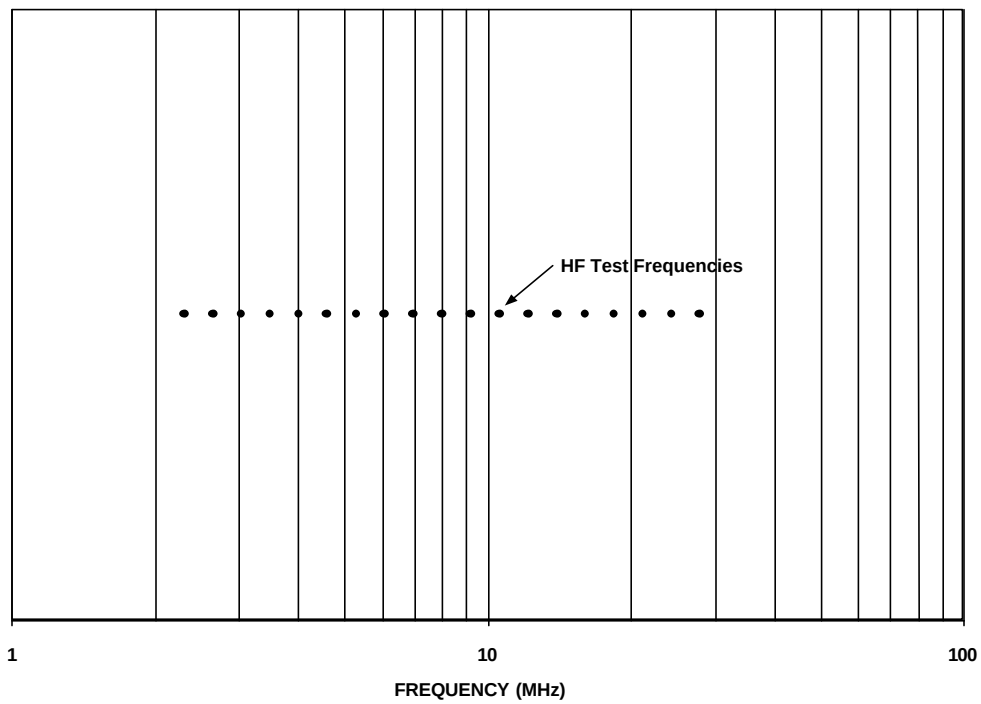

FIGURE 15. Recommended HF Test Frequencies

The transfer of energy between the ordnance and the test antenna is a function of the type of antenna, the separation distance, and the orientation of the ordnance with respect to that antenna. It can therefore be expected that differences in types of antennas or antenna-ordnance geometry will result in differences in measured responses. Transmitting antennas representative of the types present in the installation should be used in verification testing. Since the near field HF EME levels of MIL-STD-464 are driven by Navy requirements, the test antenna for all Joint HERO tests must be a vertically polarized 35-foot whip antenna.

Standard facility HF antennas may not adequately represent certain types of transportable or mobile radios that will be encountered in the field. For example, man-pack HF radios produce a unique type of EME for personnel-borne ordnance carried and/or handled in the vicinity of these emitters. Army/Marine Corps ordnance may be exposed to EME levels unique to the HF communication systems used on ground vehicle platform/systems. The test planner must evaluate these situations to determine if additional testing is warranted, that is, requiring the use of these special types of HF sources or antennas.

6.3.2.4 Field Calibration

Field calibration is the process necessary to establish the field intensity at a location deemed appropriate for illuminating the ordnance or ordnance-platform/system configuration. The importance of establishing a well defined, standardized calibration process is particularly important for near field testing. Differences in type of antenna, ordnance location, and orientation relative to the transmitting antenna can have pronounced effects on the RF current

distributions, and, hence, the coupling of RF energy into EIDs. Figure 17 shows the HF field calibration technique utilized in Navy HERO testing.

Calibration procedures begin by tuning the transmitter to a selected frequency without the SUT in the vicinity of the transmitting antenna. An electric field measurement is made at a specified location relative to the antenna. It has been determined that the criterion for selecting this location is Service-dependent. For example, the Navy uses the 10-foot rule, based on the minimum distance allowed between the SUT and the HF deck edge or whip antennas on aircraft carriers and large-deck amphibious ships. This is considered to be the "worst-case" scenario for HF EME levels in the Navy. Thus, Navy HERO certifications are conducted by establishing a known EME level at a distance of 10 feet from the transmitting antenna. The ordnance or ordnance platform/system is then positioned with its closest point 10 feet from the transmitting antenna for all orientations of the SUT. For conical HF transmitting antennas, the separation distance is established between any element of the radiating system and the SUT. For other Services, a minimum separation distance between the radiating system and the SUT will vary depending on the type of system and how it will be fielded

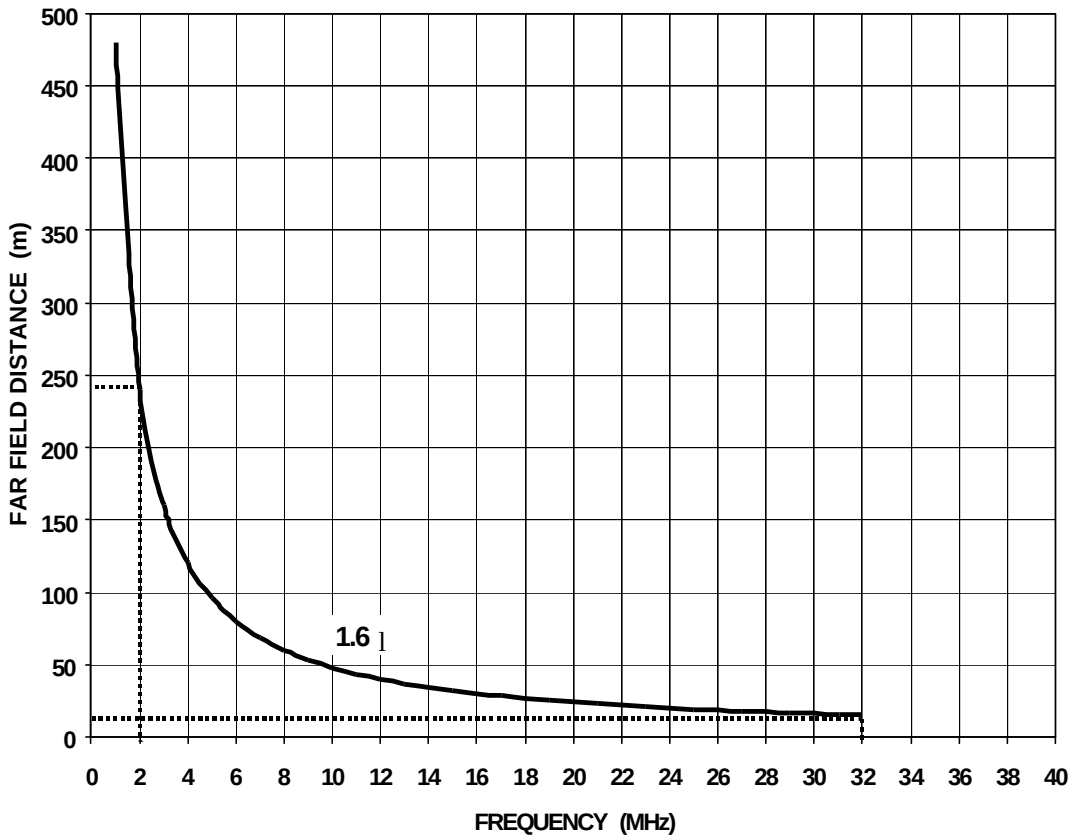

FIGURE 16. Far-Field Distance for HF Monopole

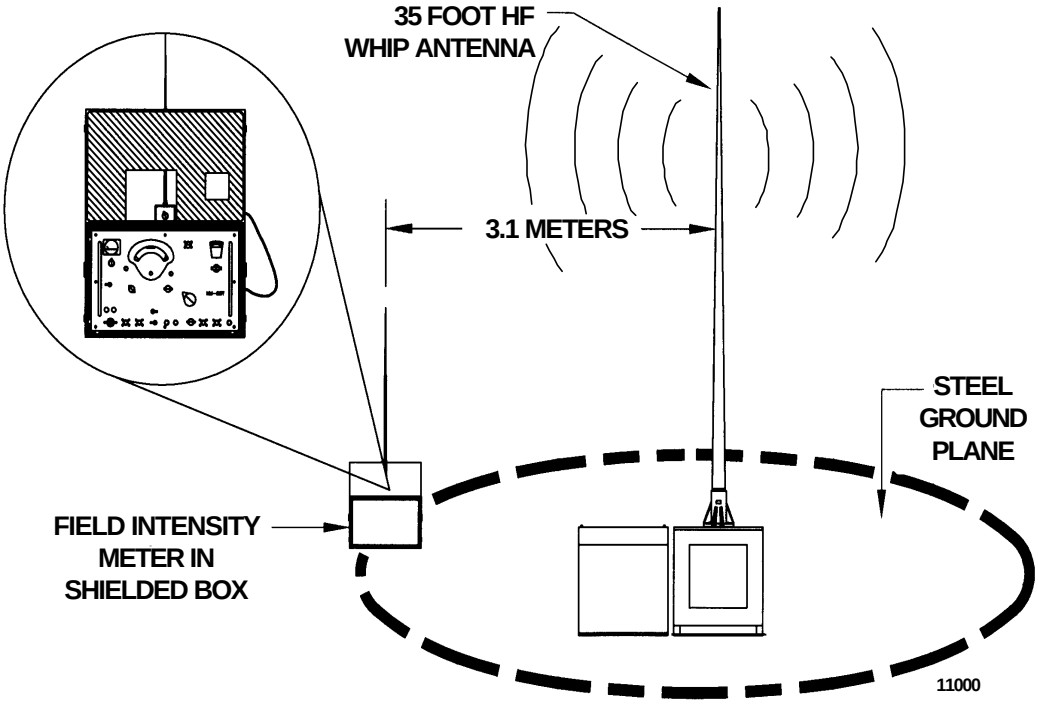

FIGURE 17. HF Field Calibration Technique

Various types of electric field sensors are used by DoD facilities to measure the HF environment. Sensors used to measure the electric field in near field conditions should not be of a design that assumes far field conditions. The Navy uses a special commercially developed frequency-selective measuring system. This system has been used to survey HF environments on ships for many years and has, in effect, become the Navy's standard for both measuring shipboard EME levels and generating those same EME levels at test facilities.

6.3.2.5 Illumination Angles/Illumination Area

A minimum of four, equally spaced, symmetric illumination angles should be used for testing in the HF range. Multiple illumination angles are typically achieved by re-positioning the ordnance or host platform/system with respect to the antenna. As an alternative, the SUT can be rotated on a turntable. Orientations may consist of "nose-on" orientation (in front of the platform/system), a "tail-on" (in back of the platform/system), and of those on each side facing the antenna. Alternatively, the test item may be illuminated from 45-degree angles with respect to the front and rear of the SUT. Experience has shown that for HF tests involving large host platform/ systems, maximum ordnance responses do not necessarily occur at the orientations where the ordnance is closest to the antenna. Figure 18 depicts a helicopter being tested in the nose-on orientation at a 10-foot distance from the HF transmitting antenna.

FIGURE 18. Helicopter in Nose-on Orientation From 35-Foot HF Antenna

6.3.2.6 Polarization

Ideally, both vertical and horizontal polarization should be used for HF testing; however, vertical polarization is preferred since experience has shown that vertical polarization generally results in greater EID response than horizontal polarization.

6.3.2.7 Modulations

HF modulations should include CW for testing non-energized circuits and modulated formats for testing energized firing circuits or peak power-sensitive EIDs such as conductive composition electric primers. Amplitude modulation (AM) or on-off keying can be used to determine if firing circuit susceptibility is modulation dependent. AM modulation should be employed at 80 percent with 400 and/or 1000 Hz tone frequencies as well as SUT operating frequencies. On-off keying should be conducted at a 50-percent duty cycle, 400-1000 Hz rate.

6.3.2.8 Pretest Platform Characterization Measurements

Testing in the HF range can require a great percentage of the test time, especially when the ordnance item/platform/system is large and interacts strongly with the transmitting antenna. Determining the maximum EID response requires testing the item at several illumination angles at each frequency. The problem is compounded when the ordnance item can be attached at

several different locations on the host platform/system. Time-consuming handling/loading procedures further exacerbate the problem. In some cases, there is simply not enough test time to complete the entire test sequence for all possible combinations of frequency, illumination angle, and ordnance attachment location. Pretest platform/system characterization has proven beneficial for identifying worst-case combinations of these parameters. If these combinations are identified prior to the test, the test director may choose to emphasize testing only at selected combinations identified as "worst-case." The following paragraphs describe two types of measurements that can be used for pretest platform/system characterization.

6.3.2.8.1 Platform-to-Ground Current Measurements

With the transmitter operating at the minimum output power necessary for detectable readings, a series of measurements is made to measure the RF current that flows between ordnance and the ground. An RF current probe can be placed around a ground strap to keep the human out of the test setup. If currents are less than I/CC PELs, the probe may be placed around the wrist of test personnel and measurements made. A series of ground current measurements can be made fairly rapidly for each test frequency at several different illumination angles. When current levels are normalized to a constant field strength, a graph of measured currents can provide valuable insight concerning which frequencies, illumination angles, and ordnance locations produce the highest ground currents. Certainly in cases where the EIDs are within the platform/system-ground current path, this is a good indication where the most severe conditions exist. For example, Figures 19a and 19b depict RF currents by a whip antenna 10 feet away in nose-on and tail-on orientations. The dominant frequencies appear to be between 6 and 8 MHz and the worst ordnance location is Station 4, the Starboard Forward Rail. Normalized current levels for other aircraft-antenna orientations can also be plotted to confirm these trends. While not foolproof, this procedure generally gives a fairly accurate indication of the "hot" frequencies, illumination angles, and ordnance locations. It should be noted that the worst-case ordnance locations might change as a function of illumination angle. Experience has shown that aircraft wing locations opposite the transmitting antenna can exhibit higher currents than the wing closest to the antenna. This underscores the need to make these measurements from at least four evenly spaced illumination angles.

6.3.2.8.2 Voltage-Ground Measurements

Similar measurements can be made of the RF voltage potential difference between ordnance locations and the ground (assumed to be a conductive ground plane). Plots of normalized data (as shown in Figures 19c and 19d) are also indicative of "worst-case" frequencies, illumination angles, and ordnance locations. Figure 20 shows a typical setup for performing voltage-ground measurements on an aircraft.

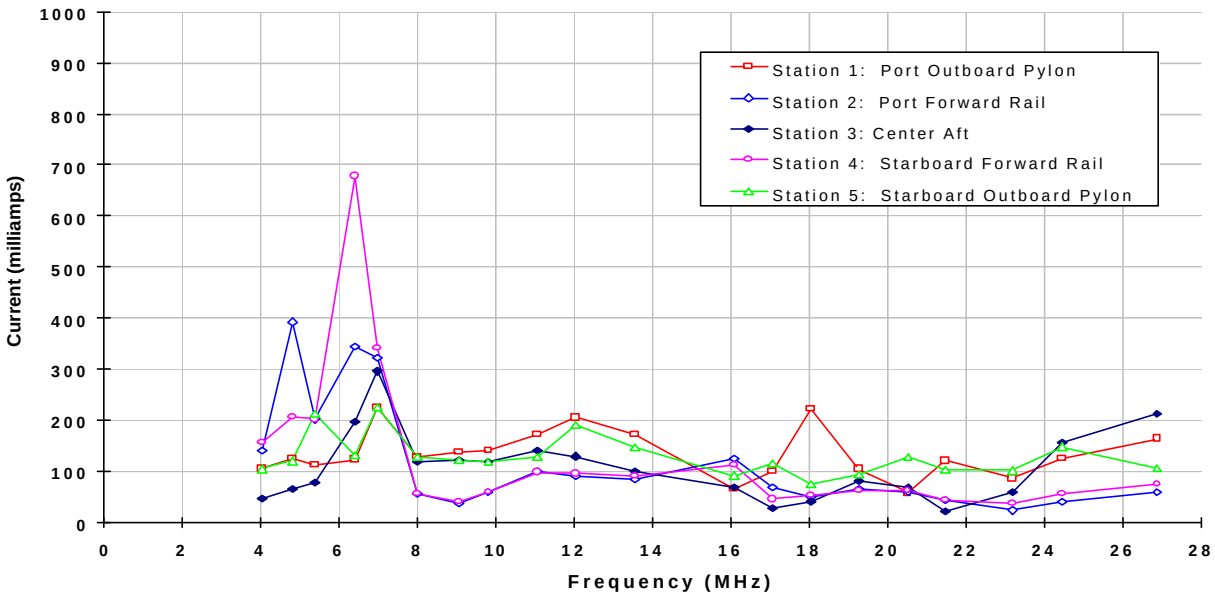

FIGURE 19a. RF Current-Ground for F-14 Aircraft in Nose-on Orientation

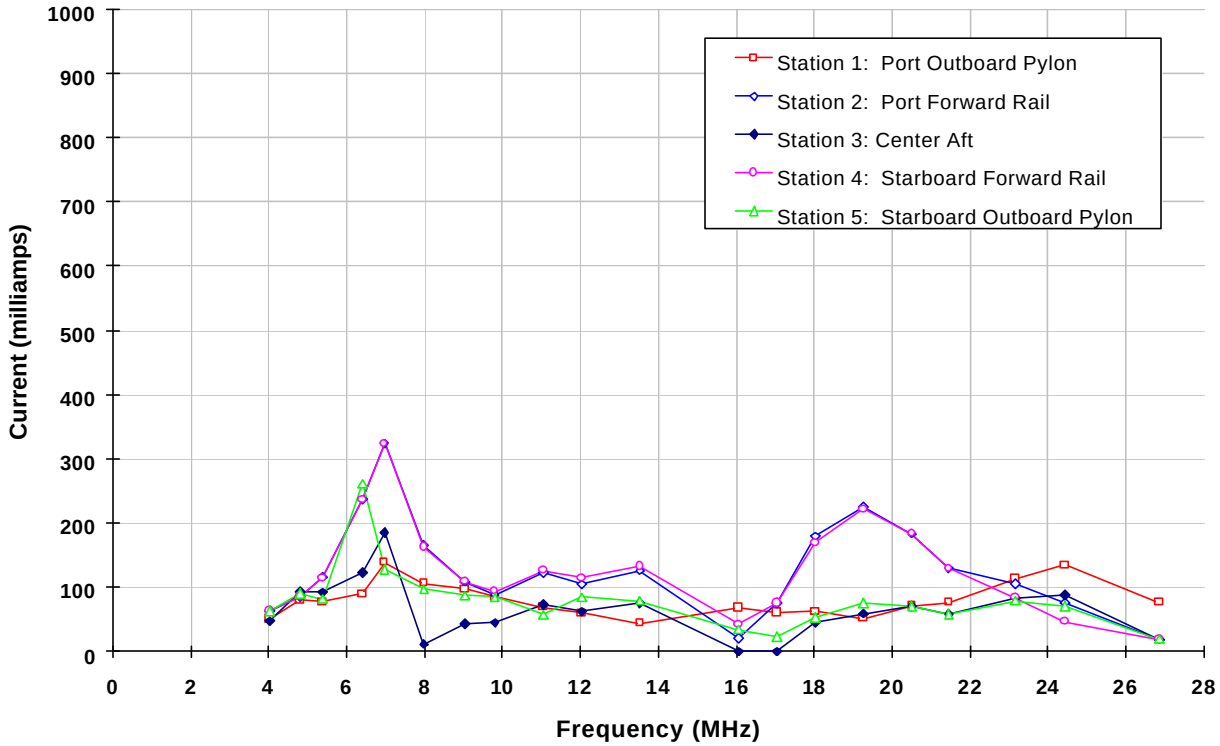

FIGURE 19b. RF Current-Ground for F-14 Aircraft in Tail-on Orientation

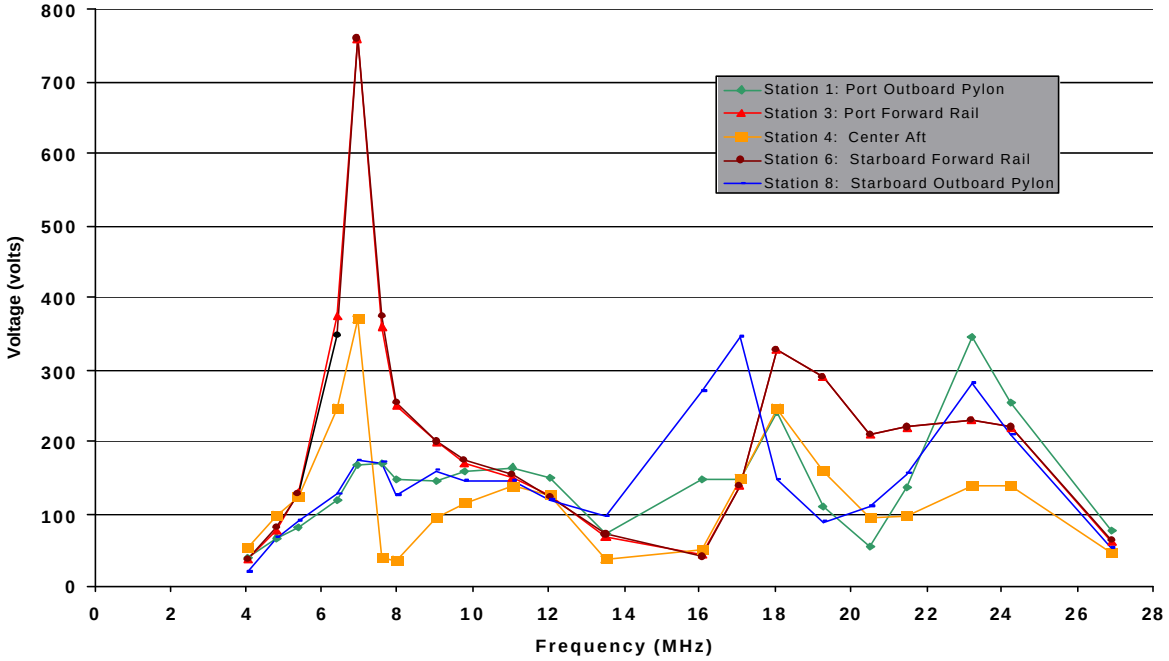

FIGURE 19c. F-14 Aircraft-to-Ground RF Voltages (Nose-on Orientation)

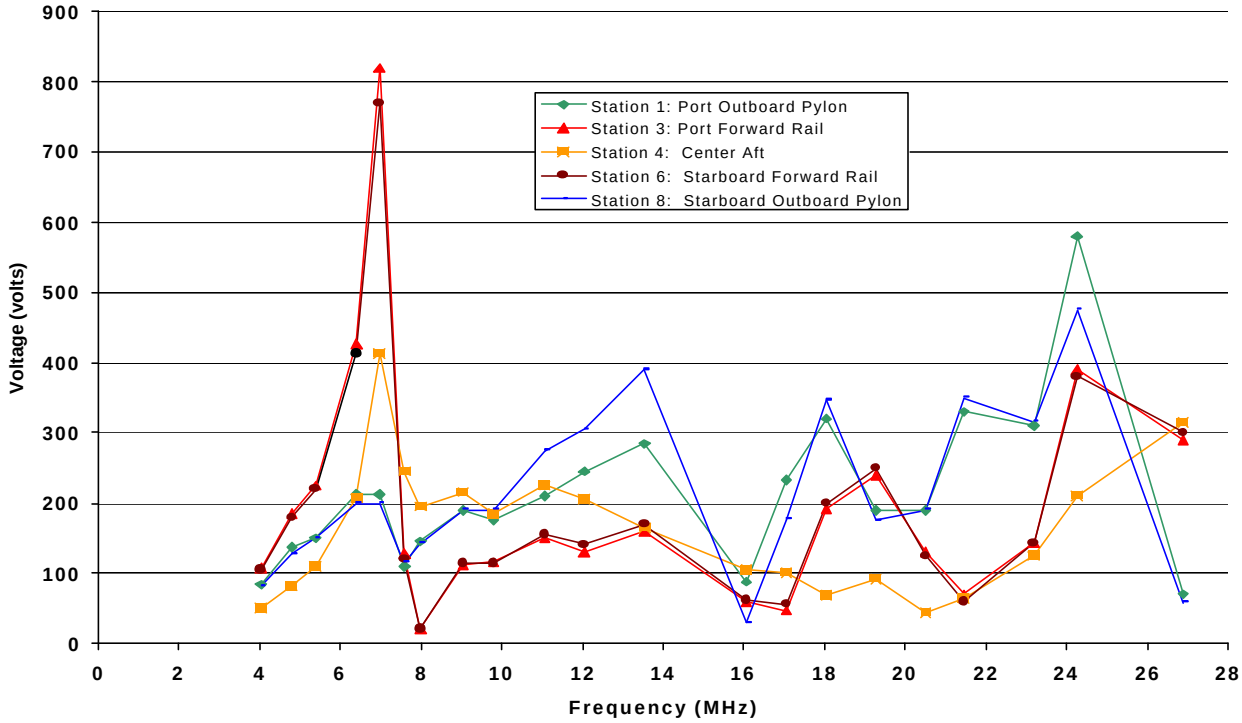

FIGURE 19d. F-14 Aircraft-to-Ground RF Voltages (Tail-on Orientation)

FIGURE 20. Voltage-Ground Measurements Setup

6.3.3 VHF Environment (30-225 MHz)

Approximately 26 percent of the recommended HERO test frequencies are in the VHF range. (See Table 4b) Traditionally, the Army has placed more emphasis on testing and therefore uses more test frequencies in the VHF range than does the Navy. For Joint applications, testing is extremely important in this range since ordnance enclosures and internal cables are of resonate lengths. Moderate gain (6-10 dB), linear-type VHF transmitting antennas tend to illuminate all of the ordnance or ordnance-platform/system surfaces, provided the test item is located at far field separation distances. Various aspects of VHF testing are discussed in more detail in the ensuing paragraphs.

6.3.3.1 Frequencies

Table 4b recommends 26 test frequencies in the VHF range. Figure 21 depicts the spacing of these frequencies. The number of sample frequencies is deemed adequate to capture maximum responses. The sampling density in this frequency range averages 0.08 sample/MHz.

6.3.3.2 Field Strength Levels

Unrestricted peak and average levels are specified in MIL-STD-464. The Restricted levels in the VHF frequency range reflect the maximum Army operational EME levels expected while personnel are executing ordnance-handling procedures. No restriction on personnel exposure

time is necessary from 30 MHz to 150 MHz, that is, continuous exposure is allowed; however, as indicated in Table 8b, time averaging at frequencies from 150-225 MHz is necessary.

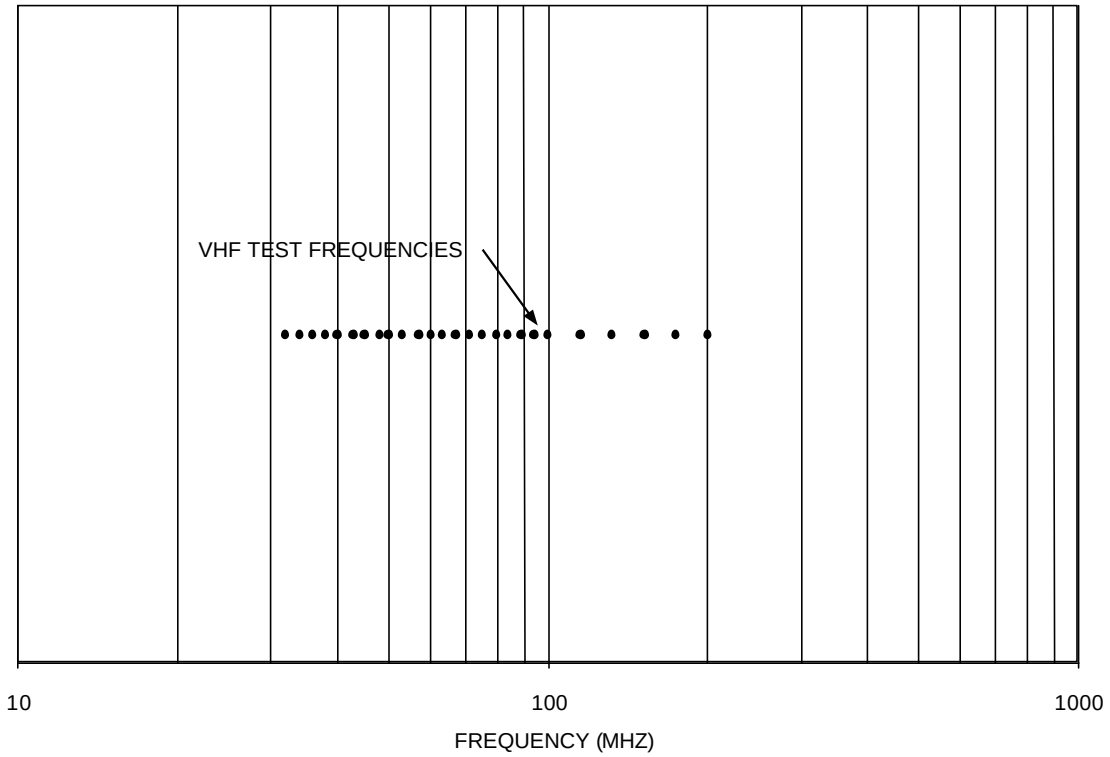

FIGURE 21. Recommended VHF Test Frequencies

6.3.3.3 Transmitting Antennas

Log periodic or Yagi-type antennas are commonly used to generate VHF/UHF test environments. If testing is conducted within the near field, the same concerns apply as discussed previously for HF testing; that is, the measured responses are likely to be influenced by the type of antenna and the ordnance location/orientation. This problem could be eliminated if testing were accomplished at far field separation distances. At frequencies above 225 MHz the far-field distances are usually less than 10 feet for the standard horn type antennas which have gains of approximately 15 dB. However, higher gain antennas can be found above 225 MHz, but their effectiveness as a test antenna is lost because of their large size and the associated increase of separation distance required to maintain far-field conditions. This amounts to a compromise between achieving desired field strength levels and maximizing the distance between the transmitting antenna and the SUT. Figure 14 illustrates typical antennas, transmitters, and monitoring equipment necessary to generate VHF/UHF test EME levels.

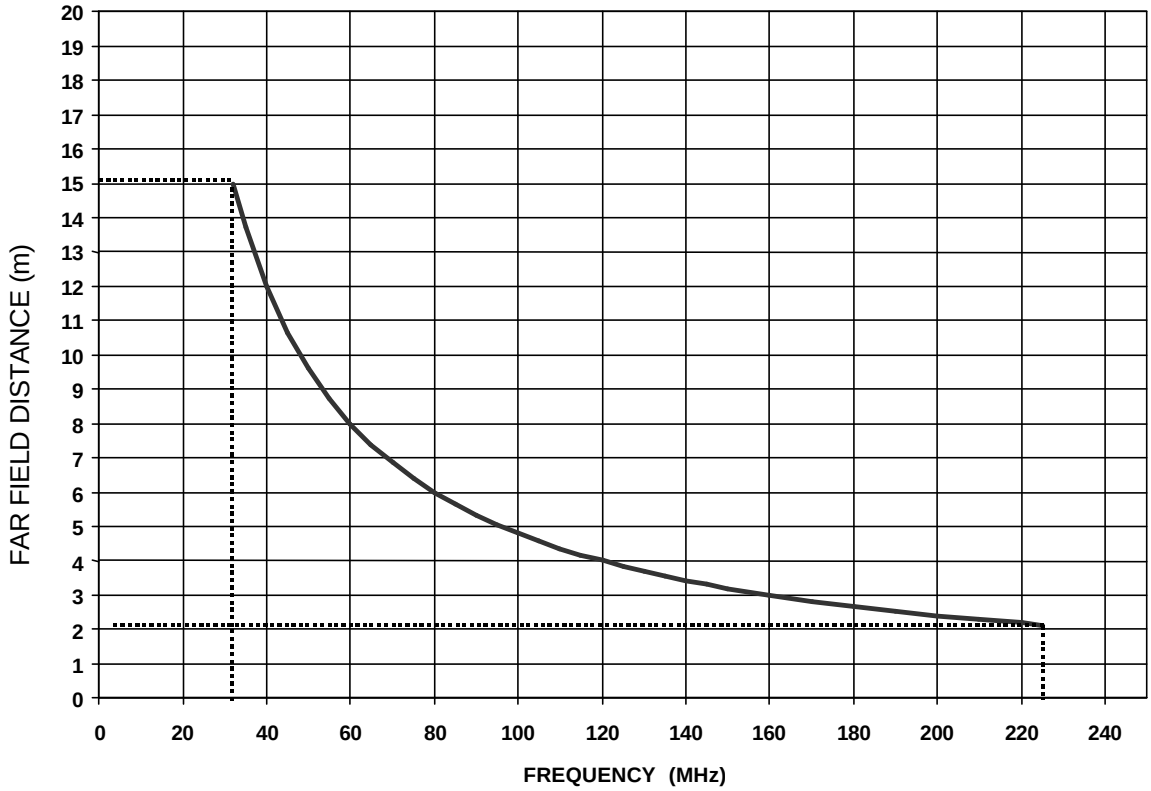

FIGURE 22. Far-Field Distance for VHF Yagi and Log Periodic Antennas

Standard test facility VHF antennas may not adequately represent certain types of transportable or mobile radios that will be encountered in the field. For example, man-pack HF/VHF radios produce a unique type of EME for personnel-borne ordnance carried and/or handled in the vicinity of these emitters. Army/Marine Corps ordnance may be exposed to EME levels unique to the VHF communication systems used on ground vehicle platform/systems. The test planner must evaluate these situations to determine if additional testing is warranted, that is, requiring the use of these special types of VHF sources/antennas.

6.3.3.4 Field Calibration

The process for VHF field calibration is similar to that used for HF field calibration, in that it involves establishing a defined field intensity at a location deemed appropriate for illuminating the ordnance or ordnance platform/system. (See 6.3.2.4) At frequencies where far field distances cannot be achieved, a standardized calibration process is particularly important. Differences in type of antenna, ordnance location, and orientation relative to the transmitting antenna are likely to have pronounced effects on the RF current distributions, and hence, coupling of EM energy into EIDs. Figure 23 illustrates the field calibration technique for VHF frequencies.

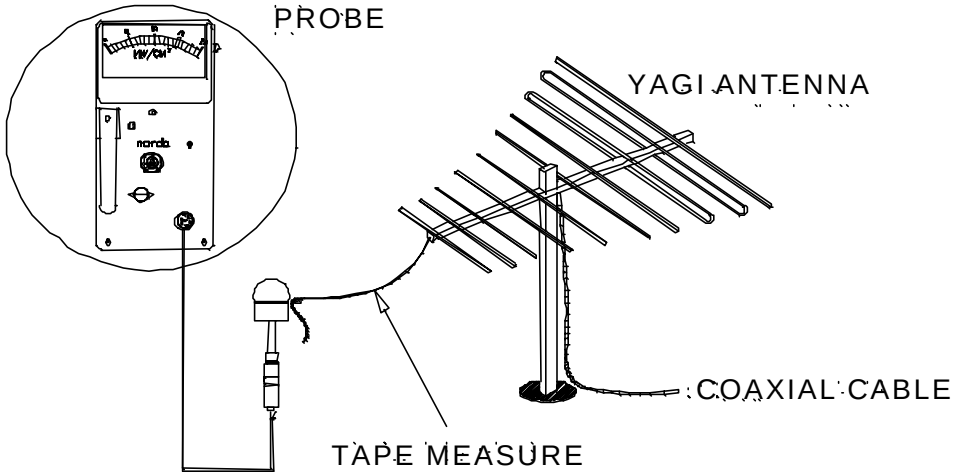

FIGURE 23. VHF Range Calibration Technique

The transmitter is tuned at a selected frequency without the SUT in the vicinity of the transmitting antenna. The desired field strength should be established at a location as far away as possible from the transmitting antenna. This will more closely simulate most operational scenarios, minimizing near field effects and achieving a maximum illumination area. However, test EME level requirements may be difficult to achieve given the available transmitter power. Hence, relatively close distances may be required. An electric field measurement is made at the specified location. This location is where the ordnance will be "spotted" once the test begins.

There are various types of electric field sensors used by DoD facilities to measure the VHF environment. Sensors used to measure the electric field under near field conditions must not be of a design that assumes far field conditions.

6.3.3.5 Illumination Angles/Illumination Area

Because the directional properties of the transmitting antennas tend to increase at higher frequencies (resulting in more narrow beamwidths), illumination angle has a more critical effect on the ordnance response. Thus, for VHF testing, where moderate gain antennas are used, it is highly desirable to illuminate isolated ordnance items from all angles (continuous illumination). Portable antennas facilitate such continuous or "painted" illumination. If the transmitting antenna cannot be moved in elevation/azimuth, the ordnance should be illuminated from at least eight angles, symmetrically selected in a 360-degree arc. If attached to a large host platform/ system, the ordnance should be illuminated at a minimum of four aspect angles in a 180-degree arc. With the transmitting antenna pointed directly at the ordnance item, platform-mounted ordnance can be illuminated to achieve four symmetrical illumination angles by repositioning the platform/system. See 5.5.1.3 for further guidance on illumination angles. Figure 24 depicts ordnance illumination at VHF frequencies.

FIGURE 24. Illumination of Test Item at VHF Frequencies

6.3.3.6 Polarization

Both vertical and horizontal polarization should be used.

6.3.3.7 Modulations

VHF modulations should include CW for testing non-energized circuits and modulated formats for testing energized firing circuits or peak power-sensitive EIDs (for example, conductive composition electric primers). AM/FM modulations should be used when testing to determine if these modulations can interfere with firing circuit logic. As a minimum, AM modulation should be set at 80 percent with a 400 and/or 1000 Hz tone frequency. FM should be set at a ± 50 kHz deviation. If PM is used, the PM parameters will be dependent on transmitter limitations and transmitted frequencies.

6.3.4 Frequencies Above 225 MHz

Approximately 44 percent of the recommended HERO test frequencies are above 225 MHz. (See Table 4c) For the most part, the EME levels in this range represent radar systems and are thus characterized by high peak-to-average field strength ratios. Because of the low duty cycle, it is possible that fast responding EIDs and solid-state circuits could sustain peak power damage without any ill effects caused by the average power. In such cases, care must be taken not to expose the SUT to excessive peak levels while striving to attain specific average levels. At very

low duty factors, a transmitter could produce undesirably high peak levels while attaining the desired average levels. If the SUT is considered to be peak power sensitive, the peak field strengths may be obtained without simultaneously achieving the required average field levels. However, testing should include the required average levels.

6.3.4.1 Frequencies

Table 4c recommends 44 test frequencies above 225 MHz. Figure 25 depicts the spacing of these frequencies. Departures from the logarithmic pattern are required to adequately represent specific DoD emitters of concern and to ensure test frequencies at the edges of the MIL-STD-464 frequency bands. From a practical standpoint, the number of samples is dictated by the amount of test time required to tune the high-power transmitter.

6.3.4.2 Field Strength Levels

Unrestricted peak and average levels are specified in MIL-STD-464. Restricted levels, representative of the levels found on flight decks of air-capable Navy ships, are expected to be the highest levels that will be encountered by personnel executing ordnance-handling procedures. As indicated in Table 8c, there are exposure time limits from 225–2750 MHz. For frequencies above 2750 MHz, no time limit is necessary if the average field strength is limited to 194 V/m or less.

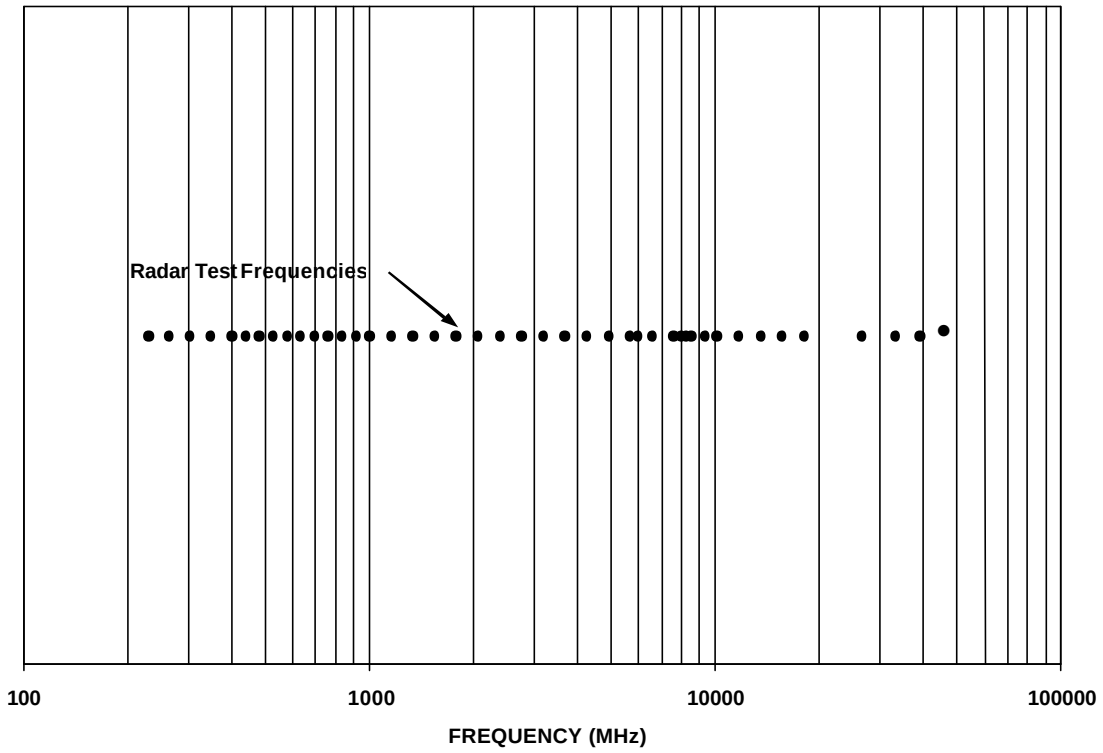

FIGURE 25. Recommended Test Frequencies Above 225 MHz

6.3.4.3 Transmitting Antennas

For frequencies above 225 MHz, the antennas most commonly used are high gain, aperture types such as horns and reflectors as illustrated in Figure 14. Far field separation distances are achievable in most cases, thus promoting consistent results from facility to facility, despite any differences in the types of the antennas used. The far field distance is calculated as $2D^2/\lambda$, where D is the largest dimension of the antenna. The far field distance is, in general, a function of wavelength and antenna dimension. This implies separation distances less than 10 feet for the antenna types and sizes. Antenna gains of 15 dB, or higher, are typical. Higher gains are attainable for large D/λ antennas, but without any apparent advantage in view of the corresponding increase in separation distance required to maintain far field conditions. In fact, a notable benefit of smaller antennas is the relative ease with which they can be maneuvered about the SUT. This facilitates repositioning the antenna to establish different illumination angles. It may be helpful to mount medium-to-large-size antennas on wheeled platform/systems to further ease relocation. The use of a flexible waveguide at or near the antenna in lieu of a rigid guide also facilitates antenna repositioning and polarization changes. Array element spacing should be sufficient to preclude arcing between elements at high peak powers.

6.3.4.4 Field Calibration

Field calibration at frequencies above 225 MHz is accomplished similar to frequencies in the VHF/UHF range. (See 6.3.2.4) The transmitter is tuned at a selected frequency without the SUT in the field. An electric field measurement is made at a specified location relative to the antenna, where the ordnance will be “spotted” once the test begins. Figure 26 illustrates the field calibration technique for frequencies above 225 MHz. Field measurements can be made with field probes that read out in units of either field strength or power density. Assuming that measurements are made under far field conditions, power density readings can be converted easily to units of field strength using the following relationship:

$$E = 61.4\sqrt{P_d}\ ,$$

where:

E is electric field strength, in V/m, and
P_d is power density, in mW/cm^2.

Measurements can also be made using standard gain receiving antennas and power meters; E is calculated as:

$$E = 2.176 / \lambda \sqrt{\frac{Pr}{Gr}}\ ,$$

where:

Pr is the received power, in mW, and
Gr is the receiving antenna gain (a dimensionless ratio).

Any losses from cables and attenuators must be taken into account, effectively increasing the value of Pr.

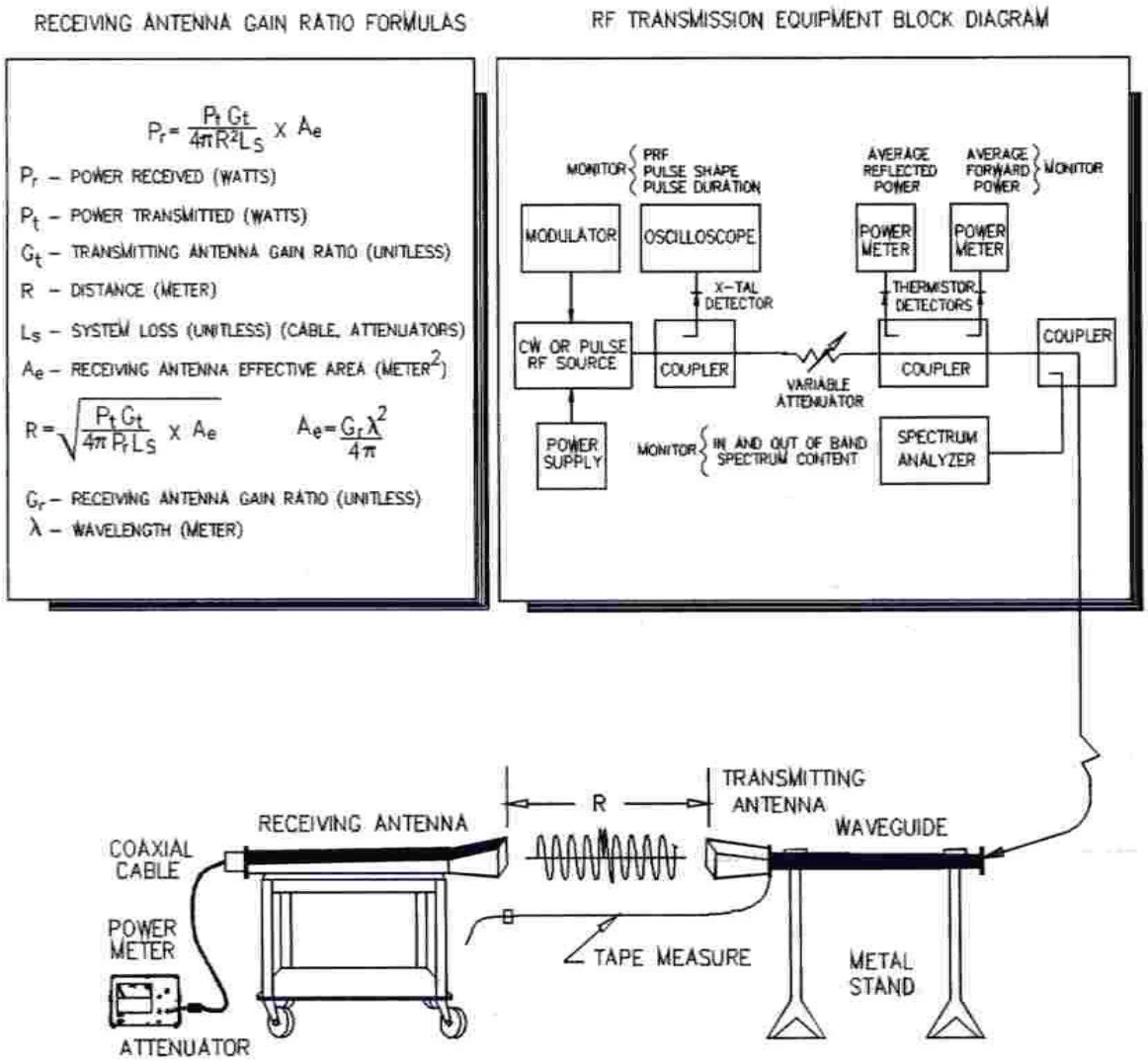

FIGURE 26. Field Calibration Technique Above 225 MHz

6.3.4.5 Illumination Angles/Illumination Area

At microwave frequencies, radiation patterns are highly directional, and slight changes in illumination angles can have a pronounced effect on the response of the SUT. It is therefore very important to illuminate the item thoroughly from all aspect angles to determine maximum EID responses. As mentioned above, antennas that are readily re-positioned about the SUT are highly recommended to achieve complete illumination. Continuous painting of the SUT with radiation is the only way to ensure that maximum responses are determined. Ideally, the item should be illuminated continuously in azimuth and elevation. Ordnance items attached to a large host platform/system should be illuminated over an 180^0 arc, directing the beam toward suspected entry points. See 5.5.1.3 for further guidance on illumination angles at microwave frequencies.

6.3.4.6 Polarization

Both vertical and horizontal polarizations should be used.

6.3.4.7 Modulations

Typically, the most severe EME levels above 225 MHz are generated by radar equipment. This is due to the extremely high peak and average power levels associated with this type of emitter. The choice of PM or CW depends on the type of radar being simulated. Typically, surveillance and navigation radars are pulse-modulated, while illuminators and special-purpose radar utilize CW. Since the modulation parameters can influence the magnitude of interference to energized firing circuits or peak power-sensitive EIDs, for example conductive composition electric primers, modulation formats should be varied to determine minimum EME thresholds.

6.4 Maximizing Responses

6.4.1 Illumination Angles

For highly directional EM fields, emphasis should be placed on those illumination angles expected to maximize EID response at the predicted points of entry (POE), for example, exposed wiring, enclosure discontinuities, exposed or poorly shielded cables. In the HF range, pretest current-ground measurements (see 6.3.2.8.1) and knowledge of worst-case HF antenna-host platform/system orientations should be reviewed. At microwave frequencies where the illumination angle is narrow, small changes can result in significantly different EID responses; thus changes in the pointing angle should be small and carefully controlled.

6.4.2 Frequency Increments

If detected responses are within 6 dB of the failure level, testing should be repeated at additional frequencies at $f_o \pm 0.01f_o$ in an effort to find the maximum response.

6.4.3 Stimulus Dwell Time

Changes in illumination angle and polarization should not exceed the response time of the EIDs. The optimum procedure, particularly at frequencies where the radiation pattern is highly directional, is to slowly paint the SUT, making small changes in the elevation and azimuth. This procedure should be conducted with continuous communication between the test personnel handling the transmitting antenna and those monitoring the EID responses. The illumination angle is thus controlled to emphasize those elevation/azimuth angles that maximize EID response. This procedure has two advantages: it improves the likelihood of finding the critical illumination angles and it ensures that the item is exposed for a sufficient time to reach maximum response.

6.4.4 Communication

It is important to maintain continuous communication between EID-monitoring personnel and

personnel controlling the transmit antenna illumination angle. As responses are observed, monitoring personnel can advise antenna controllers on optimum angles and polarization.

6.5 Non-Linear Effects

6.5.1 RF Arcing

RF arcs occur when two conductive objects under RF excitation are touched together or drawn apart. Therefore, arcing will generally occur in ordnance items during connection to the EID firing circuit, interruption of the firing circuit, or during any contact to the circuit by a conductive object. Under actual or test conditions, arcing will not occur at all frequencies, but will be dependent upon the particular antenna-ordnance item coupling involved. RF arcs contain energy components over a wide spectrum of frequencies. The arc output is normally an audio frequency (af) superimposed on a dc component. The polarity of the dc signal and the relative amplitude of the af and dc signal are primarily dependent upon the material composition of the conductive objects that form the electrodes and on the RF field intensity. Because of the non-linear nature of RF arcs and the fact that they generally occur in the HF and VHF frequency bands, HERO test results obtained in these bands cannot be extrapolated to levels above the test field intensities. It is therefore extremely important that all HERO tests in HF and VHF bands are conducted at the required MIL-STD-464 levels or at maximum available field intensities. Figure 27 is a photograph of an RF arc generated during a HERO test.

FIGURE 27. RF Arc Generated During HERO Testing

6.5.2 Energized Circuit Susceptibility

HERO assessments of EIDs in power off, linear firing circuits under non-arcing conditions are straightforward and subject to the test methods and instrumentation described previously in this handbook. HERO tests of non-linear, energized EID circuits, however, present unique challenges in test methods, instrumentation, interpretation of test results, and assessment of margins. There are two basic types of non-linear EID firing circuits: those that have power available in the circuit but must have a triggering signal applied before the EID firing circuit is activated and those that have power and firing signal applied simultaneously. HERO tests that

involve non-linear electronic EID initiating devices therefore need to consider the potential HERO susceptibilities in both linear and non-linear firing circuits. HERO evaluation of both the classical and electromagnetic vulnerability (EMV) aspects of non-linear EID firing devices require an integration of, HERO, EMV, and EMRO instrumentation and test techniques. The integrated method approach is necessary because neither the HERO nor EMV techniques alone will fully evaluate the potential susceptibilities. As with classical HERO tests, great care must be exercised when designing tests of non-linear EID firing devices to avoid using instrumentation or techniques that will alter the response of the SUT, thereby giving erroneous test results. Due to the non-linear aspects of electronic firing circuits, it is imperative that all HERO tests involving such circuits be conducted at the required MIL-STD-464 HERO levels or at maximum available field intensity levels.

6.6 Susceptibility Investigation

6.6.1 Identifying Points of Entry

All current HERO instrumentation systems provide for real-time observation of the EID data during the test. With proper communication established between the EID monitoring personnel and the transmit antenna controllers, identification of the POEs is a relatively simple task. Once the induced current in the EID of interest has been maximized by adjusting the transmit antenna aspect angles and polarization, trial and error shielding techniques in the form of aluminum foil or tape can be applied to cables and other apertures in the ordnance. The application of these techniques will reduce the coupling and thereby allow for the identification of the entry points for the EM energy.

6.6.2 Fix Development and Verification

Fixes for demonstrated HERO deficiencies generally fall into the categories of filtering, shielding, or a combination of both. There are many excellent design guides that discuss the subject in detail, such as NAVSEA OD 30393 and AD 1115. It is recommended that the HERO test engineer become familiar with several EMC design guides and implement the techniques described. This will enable the test engineer to aggressively pursue the proper fix for any HERO problems that may arise.

7. DATA ANALYSIS

7.1 Introduction

In order to draw conclusions and make recommendations from the results of a HERO test, the test data must be presented in a format that supports the test objectives clearly and concisely. Typically, the raw test data consists of the magnitudes of induced current, voltage, or power onto the EID during the conduct of the test procedures. The raw test data in its original form is insufficient for the evaluation of the test results. Other parameters, such as EME test field, EME criteria, resistance of the EID bridgewire, EID MNFS, and the firing consequence factor (FCF), must be analyzed with the raw test data. These results are then converted into a format that supports the conclusions and recommendations drawn from the test data. This section details the process necessary to accomplish the data analysis. The process is a three-step procedure consisting of the following:

a. Converting the EID response at the EME test level into the EID response at the criteria EME level,

b. Converting the EID response at the criteria EME level into the MAE, and

c. Determining a single MAE level for each frequency band of the specified criteria EME in each of the S4 phases.

7.2 Detected Responses

EID responses are usually quantified in terms of induced current (I_i). In some cases, the response may be indicated in terms of induced voltage (V_i) or absorbed power (P_i). Since the pass/fail and EID no-fire criteria are most often expressed with respect to the MNFC, the absorbed power measurement must be converted from power to current, which requires knowledge of the resistance of the bridgewire. Thus, the response of the EID in absorbed power can be converted into induced current by taking the square root of the ratio of the absorbed power to the resistance of the bridgewire of the EID (R_{EID}). In the case of induced voltage, the pass/fail criterion is expressed with respect to the maximum no-fire voltage (MNFV) and can be determined in the same manner as the induced current. Therefore, for the purposes of this handbook, only the calculations for determinations of the induced current will be presented since the calculations for the induced voltage or absorbed power can be easily determined.

7.3 Undetected Responses

In many instances, there are no detected responses due to limitations on the test EME levels and/or instrumentation sensitivity. In these cases, subsequent data analysis assumes a response at the instrumentation system's minimum detectable current (MDC) level.

7.4 Pass/Fail Criteria (Required Margins)

In order to pass the HERO requirements of MIL-STD-464, ordnance item’s EIDs must have

safe and reliable margins of protection against EM-induced currents when exposed to the radiated EME levels that are expected to be encountered during its S4. An analysis of the HERO test data will therefore form the basis for determining if margin requirements for the ordnance item have been met. Consequently, the test data should be analyzed for each test procedure conducted to determine if the requirements are met. These requirements are based on two possible consequences (safety and reliability) of the unintentional initiation of any EID in the ordnance, which are described below in 7.4.1.

7.4.1 Firing Consequence Factors (FCFs)

The 16.5 and 6 dB HERO margin values defined in MIL-STD-464 are referred to as FCFs.

a. To avoid safety consequences, no more than 15 percent (16.5 dB margin) of the MNFC of EIDs within ordnance should be measured during any authorized test procedure.

b. To avoid reliability consequences, no more than 50 percent (6 dB margin) of the MNFC of EIDs within ordnance should be measured during any authorized test procedure.

7.5 Determination of EID Response at Criteria EME Level

Upon measurement of the EID response at the test EME level (induced current, I_i), the data must be converted into the EID response at the criteria EME level (criteria induced current, I_c). The EID response at the criteria EME level (I_c) is calculated by multiplying the induced current (I_i) by the ratio of the criteria EME level (E_c) to the test EME level (E_t). The equation below (7.5-1) presents this calculation. It should be noted that extrapolation of the EID induced current to the EID response at the criteria EME level is limited to the extrapolation limits detailed in 7.6.1.

$$I_c = I_i(E_c / E_t) \qquad (7.5\text{-}1)$$

7.5.1 Determination of Pass/Fail

The calculation of the EID response at the criteria level allows for determination of pass/fail of the EID at all test frequencies. The EID response at the criteria level is compared to the EID pass/fail level ($I_{p/f}$) to determine pass/fail of the EID at a given frequency. The EID pass/fail level is determined as shown in the equation below (7.5.1-1). If the EID response at the criteria level exceeds the EID pass/fail level, then the EID is considered a fail status at that specific frequency. If the EID response at the criteria level is less than or equal to the EID pass/fail level, then the EID is considered a pass status at that specific frequency. Each frequency band can then be evaluated to determine the pass/fail status by evaluation of the pass/fail status of the EID at each frequency within the individual frequency band. For ordnance that contains multiple EIDs, the pass/fail status of each frequency band should consider the cumulative pass/fail status of all the EIDs at each frequency band.

$$I_{p/f} = (FCF_d)\ (MNFC) \qquad (7.5.1\text{-}1)$$

where:

$I_{p/f}$ = EID pass/fail level
FCF_d = FCF as a decimal ratio (.15 for a safety item or .50 for a reliability item), and
MNFC = Maximum no-fire current of EID.

7.5.2 Determination of Pass/Fail Margin

The pass/fail margin (P/FM) of the EID is a dB comparison of the maximum levels of the induced currents to the allowable levels of induced currents at each test frequency. The P/FM is determined by either of the following equations:

$$P/FM = 20 \log (I_{p/f} / I_c) + FCF \qquad (7.5.2\text{-}1)$$

$$P/FM = 20 \log (MNFC / I_c) \qquad (7.5.2\text{-}2)$$

If the P/FM of the EID is less than the FCF, then the EID is considered a fail status at that specific frequency. If the P/FM of the EID is greater than or equal to the FCF, then the EID is considered a pass status at that specific frequency. Each frequency band can then be evaluated to determine the pass/fail status by evaluation of the pass/fail margin of the EID at each frequency within the individual frequency band. For ordnance that contains multiple EIDs, the P/FM of each frequency band should consider the cumulative P/FM of all the EIDs at each frequency band.

7.6 Determination of Maximum Allowable Environment

The MAE is limited by the guidance detailed in 7.6.1 and is determined by tests at all frequencies of interest, to which the ordnance can be exposed without degrading its safety or reliability. The MAE at a given frequency is a calculated field intensity at which the current induced in the EID is equal to the MNFC of that EID, reduced by the appropriate FCF. The MAE is calculated using the following equation:

$$MAE = E_t (I_{p/f} / I_i) \qquad (7.6\text{-}1)$$

where:

MAE = Maximum allowable environment (V/m),
E_t = Test EME level (V/m),
$I_{p/f}$ = EID pass/fail level (mA), and
I_i = EID induced current measurement (mA).

If no response is measured during testing, use the MDC as I_i. It should be noted that the criteria EME level (E_c) can be substituted for the test EME level only if the EID response at the criteria EME level (I_c) is substituted for the EID induced current measurement (I_i).

7.6.1 Extrapolation Limits

At many EM test facilities, criteria EME test levels cannot be generated over all the required

frequency ranges. Additionally, it is desirable to determine the maximum level to which an ordnance item can be safety certified, based upon the test data, in order to facilitate the safe handling of the item in higher environments should the need arise in the future. A commonly accepted practice is to measure the response of the EIDs at the maximum field intensity capability of the test facility and extrapolate those measurements to determine the MAE. In order for this extrapolation to be valid, the following applies:

a. The instrumentation must be sensitive enough so that its minimum detectable level, when increased by the ratio of the required field to the test field, is still less than the no-fire characteristics of the EID reduced by the appropriate FCF from 7.4.1.

b. There must be some reasonable evidence that the EM responses of the ordnance system EID circuits are linear in the region from the point at which the measurements are made to the point which they are to be extrapolated.

If both of these conditions are met, HERO test data can be gathered at levels readily available at most test facilities and extrapolated to higher levels. It has been determined that there needs to be some reasonable limit on the extrapolation and hence the MAE level reported in the test report (See 8 and Appendix A.). Table 9 presents the limits beyond which MAE extrapolation is considered invalid.

7.7 Determination of MAE Per Frequency Band

Upon determination of the individual MAE for each EID at each test frequency, the MAE for the individual frequency bands can be established. The MAE for each frequency band is established by reviewing the MAE of each EID at each individual frequency within the bounds of the frequency band. The MAE for that particular frequency band is then set at the lowest MAE of these individual MAEs. For example, assume the ordnance item tested contains two EIDs. At 18 MHz, the MAE for EID 1 is 100 V/m and the MAE for EID 2 at 4 MHz is 50 V/m. The MAE for this ordnance item in the 2 to 30 MHz frequency band should be reported as 50 V/m.

TABLE 9. MAE Extrapolation Limits

Frequency (MHz)	MAE Extrapolation Limit (V/m Average)	
	Handling & Loading Assembly/Disassembly Phases[2]	All Other Stockpile-To-Safe Separation Phases
0.010-30	25[1]	1000
30-150	50	1000
150-225	100	1000
225-400	100	1000
400-700	100	3000
700-790	100	3000
790-1000	200	3000
1000-2000	200	3000
2000-2700	200	3000
2700-3600	200	3000
3600-4000	200	3000
4000-5400	200	3000
5400-5900	200	3000
5900-6000	200	3000
6000-7900	200	3000
7900-8000	200	3000
8000-8400	200	3000
8400-8500	200	3000
8500-11000	200	3000
11000-14000	200	3000
14000-18000	200	3000
18000-45000	200	3000

NOTES:

1. Limited to 25 V/m or the actual test EME level, whichever is greater. In no case should the reported extrapolated MAE exceed 25 V/m due to potential arcing concerns.

2. Time averaging may be required.

This page left intentionally blank.

8. DOCUMENTATION

8.1 Introduction

When it is necessary for contractors to obtain the data to show compliance with the requirement of MIL-STD-464, the following DIDs must be listed on the Contract Data Requirements List (DD Form 1423), except where the DoD Federal Acquisition Regulation Supplement exempts the requirement for a DD Form 1423.

DID Number	DID Title
DI-EMCS-81540	Electromagnetic Environmental Effects (E^3) Integration and Analysis Report
DI-EMCS-81541	Electromagnetic Environmental Effects (E^3) Verification Procedures
DI-EMCS-81542	Electromagnetic Environmental Effects (E^3) Verification Report

For all other situations, the data items may be prepared in accordance with Appendix A.

8.2 Purpose of Test Documentation

Test documentation incorporates the total assimilation of a test program. Without proper documentation, a full test program could be forfeited. The test plan lays the groundwork for accomplishing the mission of HERO certification/compliance. All the minute details for conducting the test must be captured here. The core elements of the HERO test program are the test procedures and the data collection. Faithful execution of the test procedures and explicit data collection will bring the test goals into focus and lead to a successful completion of the test mission. The test report unifies the goals and objectives by summing up the test data into viable conclusions and recommendations, thus finalizing the process.

This page left intentionally blank.

9. NOTES

9.1 Intended Use

This handbook can be used by any facility engaged in HERO testing for any of the military departments.

9.2 Supersession Data

Not applicable.

9.3 Cross Reference of Classifications and Substitutability Data.

Not applicable.

9.4 Subject Term (Keyword) Listing

E3
Electromagnetic
Electromagnetic Compatibility
Electromagnetic Environmental Effects
Electromagnetic Radiation Hazards
EMC
Hazards of Electromagnetic Radiation to Ordnance
HERO

9.5 Identification of Changes

Not applicable.

9.6 Technical Points of Contact

Requests for additional information about, or assistance in using, this standard can be obtained from the following:

Air Force
Air Armament Center (AAC)
Seek Eagle Office
AAC/SKP (Mr. J. Brooks)
205 West D Avenue
Suite 348
Eglin AFB, FL 32542-6865
(850) 882-9551 x3304
john.brooks@eglin.af.mil

Army

Test and Evaluation Command (ATEC)
Redstone Technical Test Center (RTTC)
E3 Test Branch (E3 for Missile System Functions
Attn: CSTE-DTC-RT-E-EM (Mr. J. Craven)
Redstone Arsenal, AL 35898-8052
(256) 842-2552)
jcraven@rttc.army.mil

Navy

Naval Surface Warfare Center, Dahlgren Division
EM Effects Division, Code J52
Attn: Mr. C. Denham
17320 Dahlgren Road
Dahlgren, VA 22448-5100
(540) 653-3444
denhamcc@nswc.navy.mil

Joint Spectrum Center

E3 Engineering Division (J5)
Attn: Mr. M. Shellman Jr.
2004 Turbot Landing
Annapolis, MD 21402-5064
(410) 293-4958
shellman@jsc.mil

Any information relating to Government contracts must be obtained through contracting officers.

APPENDIX A

DOCUMENTATION

CONTENTS

Paragraph **Page**

A.1 Introduction 99

A.2 Test Plan 99
A.2.1 Front Cover 99
A.2.2 Table of Contents 99
A.2.3 Glossary 99
A.2.4 Main Body Sections 99
A.2.4.1 Introduction 100
A.2.4.2 Background 100
A.2.4.3 Purpose 100
A.2.4.4 Scope 100
A.2.4.5 Ordnance Item Description 101
A.2.4.6 Ordnance Item Test Configuration 101
A.2.4.7 Test Instrumentation 101
A.2.4.8 Description of HERO Test Facility 101
A.2.4.9 Description of Test Environments 102
A.2.4.10 Description of Test Item's S4 Phases 102
A.2.4.11 Pass/Fail Criteria 102
A.2.4.12 Test Management Requirements 102
A.2.4.13 Test Support Personnel 102
A.2.4.14 Ordnance Item (Manufacturer) Support 102
A.2.4.15 Test Ground Support Equipment 103
A.2.4.16 Hardware Assets 103
A.2.4.17 Test Schedule 103
A.2.4.18 Test Reporting 103
A.2.4.19 Safety Precautions and Standard Operating Procedures 103
A.2.4.20 References 103
A.2.5 Appendices 103
A.2.5.1 Appendix A - Test Schedule 104
A.2.5.2 Appendix B - Detailed Description of the Test Configuration 104
A.2.5.3 Appendix C - Test Environments 104
A.2.5.4 Appendix D - Test Procedures 104
A.2.5.5 Appendix E - Instrumentation 105

A.3 Test Report 105
A.3.1 Front Cover 105
A.3.2 Table of Contents 105
A.3.3 Glossary 105
A.3.4 Main Body Sections 105
A.3.4.1 Introduction 106
A.3.4.2 Background 106

A.3.4.3 Purpose 106
A.3.4.4 Scope 106
A.3.4.5 Test Results Discussion 106
A.3.4.6 Conclusions 106
A.3.4.7 Recommendations 106
A.3.4.8 References 107
A.3.5 Appendix 107

TABLES

TABLE A-1 Sample Data Sheet Format 108

This page left intentionally blank.

A.1 Introduction

This appendix provides guidance for the preparation of documentation associated with the HERO test program.

A.2 Test Plan

The test plan is the foundation upon which the entire HERO test program is constructed. The hallmark of a well-written test plan is that it will enable any HERO test organization to accomplish the required evaluations with a minimum of interpretation and confusion. The outline of the test plan should be as follows:

a. Front cover
b. Table of contents
c. Glossary
d. Main body section
e. Appendixes

A.2.1 Front Cover

The front cover of the test plan should include the following information:

a. Title of the document
b. Month and year of publication
c. Name(s) of the principal author(s)
d. Name and location of the test agency
e. Program office or test sponsor's name and address (Prepared for:)
f. Distribution statements as required
g. Security classification markings as required

A.2.2 Table of Contents

The table of contents should list each major section and subheading of the test plan along with the appropriate page numbers. A list of figures and tables should also be included.

A.2.3 Glossary

The glossary should contain definitions of terms, a list of abbreviations, and a list of acronyms used in the plan. All are listed alphabetically.

A.2.4 Main Body Sections

The main body of the plan should include the following sections, with the content for each section detailed below:

a. Introduction
b. Background
c. Purpose
d. Scope
e. Ordnance item description
f. Ordnance item test configuration
g. Test instrumentation
h. Description of HERO test facility
i. Description of test environments
j. Description of test item's S4 phases
k. Pass/fail criteria
l. Test management requirements
m. Test support personnel
n. Ordnance item (manufacturer) support
o. Test ground support equipment
p. Hardware assets
q. Test schedule
r. Test reporting
s. Safety precautions and standard operating procedures (SOPs)
t. References

A.2.4.1 Introduction

This section provides a brief synopsis of the HERO issues within DoD and an explanation of why the HERO program is needed. It also informs the reader as to why HERO is an important safety/reliability concern.

A.2.4.2 Background

This section provides general information about the ordnance item under test and the program sponsor. It includes a brief description of the item’s mission, configuration, and S4 phases.

A.2.4.3 Purpose

This section provides the overall test objectives and should indicate if the test is a full-scale HERO evaluation test or a HERO developmental test. Unlike a full-scale evaluation test, developmental tests are designed only to evaluate an existing or proposed EMI fix or to assess certain special operational deployment phases or configurations. Developmental tests are not a substitute for a full-scale evaluation test. This section should also reference any standards, specifications, or requirements that are applicable.

A.2.4.4 Scope

This section presents the overall concept of the test including the location(s), duration, schedule, and number of test items. Sufficient detail should be cited to allow the reader to clearly under-

stand the extent of the testing. Special test considerations, such as known limitations, should be addressed. In addition, the following subjects should be briefly discussed:

a. Test configuration(s)
b. S4 phases to be tested
c. Reference sources for authorized test procedures
d. Test environments
e. EIDs to be tested
f. Operational states during the test (that is, powered or non-powered) with respect to the S4 phases
g. Quality assurance plans

A.2.4.5 Ordnance Item Description

The ordnance item description is derived from its specification or other source documents. The item should be described in terms of function, technical parameters, physical characteristics, mission, and S4. If the ordnance item consists of several major components or sections, identify and describe each one. If the test item differs greatly from previously tested items, describe the differences**.** If literature on the item exists, include appropriate extracts from the descriptive literature and cite the reference number and/or title. Ensure that the manufacturer's performance claims are not included as facts in the description. Listing physical characteristics or specification requirements rather than performance claims is advisable. The ordnance item should be described in terms of its function and intended mission. Include diagrams, line drawings, or photographs. Identify all applicable launch platforms/systems and describe each of the items' S4 phase configurations.

A.2.4.6 Ordnance Item Test Configuration

This section should provide a description of the ordnance items procured for the test. The description should include the version or model to be tested, for example, production, pre-production, pilot production, tactical, exercise, and telemetry. Describe how the ordnance item and its EIDs will be rendered inert. In addition, provide a brief description on how the test item will be modified in order to accomplish the instrumentation.

A.2.4.7 Test Instrumentation

Briefly describe the type of EID instrumentation to be utilized, such as thermocouples, vacuum thermocouples. Identify the types of data recorders, amplifiers, and data transmission lines. The detailed description of the instrumentation system and EID data should be included in Appendix E of the plan.

A.2.4.8 Description of HERO Test Facility

Describe the test facility's physical properties, such as ground plane, anechoic chamber, and screen room. Identify the EM transmitters and antennas and describe how they are used to establish the test environments in both the near and far fields. Identify any unique test equipment or fixtures that may be required for the test.

A.2.4.9 Description of Test Environments

This section should contain a brief discussion of the test EME levels. The test frequencies (including modulations and polarizations), the test antenna locations relative to the test item, the maximum PEL levels, the applicable MIL-STD-464 HERO EME levels for each frequency, and the S4 phases to be tested should be furnished in Appendix C of the plan.

A.2.4.10 Description of Test Item's S4 Phases

All of the test item's S4 phases should be identified. The particular phases to be tested should be decided upon prior to writing the test plan to ensure that the entire life-cycle sequence is understood, and that the proper ordnance test configurations are delineated in the test plan. In this section, describe the S4 in detail and give the rational for selecting the phases to be tested. The test procedures should be described in sufficient detail to enable the reader to understand exactly what will occur during the test. Applicable test operations procedures and MIL-STDs should be referenced. Describe in detail how to conduct the test so that personnel at another test facility, with knowledge in the testing such materiel, can follow the procedures and successfully conduct the test. Specify the data that will be required to conduct the test, the process for acquiring it, and its justification. Describe how the test item will be operated or exercised and under what conditions it will be exposed in order to conduct the test.

A.2.4.11 Pass/Fail Criteria

This section should list the test evaluation criteria and its source (state source and paragraph in parenthesis following each criterion), and the applicable HERO EME levels in MIL-STD-464. Prior to the test, a qualified safety engineer should have determined the consequence of inadvertent function/operation of each EID in the ordnance item. State the applicable firing consequence factors (HERO margins) for each of the test item's EIDs.

A.2.4.12 Test Management Requirements

Identify the test engineer assigned the responsibility for conducting the evaluation. Include the test engineer’s telephone number and e-mail address.

A.2.4.13 Test Support Personnel

Identify who will operate and maintain the ordnance item during the test effort, such as soldiers, sailors, or airmen, personnel from the program office, contractor personnel, or test facility personnel trained in the operation and maintenance of the item. Identify facility test personnel who will operate and maintain the transmitting and instrumentation equipment during the test.

A.2.4.14 Ordnance Item (Manufacturer) Support

Occasionally, a manufacturer’s support is required to disassemble, assist in instrumentation, and reassemble the ordnance item for HERO testing. If manufacturer support is required, list the

name of the facility, the manufacturer's designated representative(s), and all applicable telephone numbers and e-mail addresses.

A.2.4.15 Test Ground Support Equipment

Ground support equipment will be required for most HERO tests. List all support equipment that will be required for the evaluation and specify the availability, source(s), and required-by date for all equipment to be procured off-site.

A.2.4.16 Hardware Assets

List all hardware assets other than ground support equipment that will be requisitioned for the test. Give sources and required-by dates for all hardware assets. Hardware assets include, but are not limited to ordnance hardware, EIDs, special tools, material handling equipment, and special test support fixtures.

A.2.4.17 Test Schedule

Briefly discuss the test schedule and include a detailed schedule in Appendix A of the plan.

A.2.4.18 Test Reporting

A report detailing the results, conclusions, and recommendations should be issued by the test activity within a specified number of days from the end of the test data analysis. See A.3.

A.2.4.19 Safety Precautions and Standard Operating Procedures

Reference all applicable safety precautions that are in the operational documents from which the test procedures were derived. Reference locally generated SOPs that will be in effect for the HERO test. Always include procedures to prevent personnel safety issues during the test.

A.2.4.20 References

List all reference documents in the order in which they were mentioned in the test plan. Include date and specify the revision number of the referenced document.

A.2.5 Appendices

The appendices include all the ancillary information pertaining to the test, such as test schedule, test environments, references, abbreviations, test procedures, test item configuration, test instrumentation, and the document distribution list. The following appendices should be included, with the contents of each described below:

A. Test schedule
B. Detailed description of test configuration(s)
C. Test environments

D. Test procedures
E. Instrumentation

A.2.5.1 Appendix A - Test Schedule

Provide a realistic schedule of the test effort to ensure efficient programming and use of the resources. First, schedule any test that will provide input for the safety release. Prepare an incremental test schedule that presents an estimate of the net testing time in a Gantt chart. Specific milestones for a HERO test schedule might include the following:

a. Receipt of all test hardware items
b. Receipt of all test documentation
c. Fabrication of test fixtures
d. Instrumentation of the EIDs
e. Instrumentation of the test item
f. Calibration of the instrumentation
g. Testing duration (actual dates)
h. Test report
i. Return of test assets

A.2.5.2 Appendix B - Detailed Description of the Test Configuration

Include information in Appendix B that identifies the applicable test ordnance configuration/life-cycle phases, platform/system(s), ordnance item, component/subsystem, launcher, aircraft interface cabling, ancillary equipment, and EID parameters. Present the EID parameters as follows:

EID Reference Number	Function	Part Number	Maximum No-Fire Current (amps)	Resistance (ohms)	Firing Affects
A-1	Rocket Motor Ignition	MK 1 Squib	0.2	1 ± .2	Safety

A.2.5.3 Appendix C - Test Environments

Describe, in general terms, the equipment and facilities that will be used to create the test EM environment. Include figures and tables that have detailed descriptions of the equipment and facilities to be used.

A.2.5.4 Appendix D - Test Procedures

Indicate the applicable operational procedures for each of the S4 phases and configurations. These procedures are delineated in the operational or technical manuals for the ordnance and should be presented in Appendix D of the test plan. It is very important to ensure that the test procedures are based on the authorized operational procedures that will be utilized on the battlefield or on board ship, and that all responsible parties agree to them. Include procedures for each ordnance item and its S4 configuration. Number the procedures so that the test data can be

identified relative to the test point being addressed. Occasionally, to expedite testing, the procedures can be changed slightly or consolidated based on the knowledge gained from repeated tests of the item. If changes are made in the test procedures during the test, document the changes and specify the reason for changes in the test report. If the changes impact the operational use of the item, contact the originators of the technical manuals and discuss the changes to achieve concurrence prior to adoption.

A.2.5.5 Appendix E - Instrumentation

Identify the EIDs that will be instrumented and monitored during the test and describe the type of sensors and instruments that will be used to gather the test data. Describe the calibration process and identify the group that will be responsible for the instrumentation.

A.3 Test Report

The test report is written primarily to document the results of the test and to clearly and precisely present the conclusions and recommendations drawn from the test data. The test report should include an updated test plan, as well as test results, a discussion of the test results, conclusions and recommendations based on the test results, test data, and photographic documentation of the test item and a sample test setup. The outline of the test report should be as follows:

a. Front cover
b. Table of contents
c. Glossary
d. Main body section
e. Appendix

A.3.1 Front Cover

The front cover of the test report should be similar to the format used for the test plan (see A.2.1).

A.3.2 Table of Contents

The table of contents should list each major section and sub-heading of the test report, along with the appropriate page numbers. A list of tables and figures should also be included.

A.3.3 Glossary

The glossary should contain definitions of terms, a list of abbreviations, and a list of acronyms used in the report. All are listed alphabetically.

A.3.4 Main Body Sections

The main body of the report should include the following sections, with the content for each detailed below.

a. Introduction
b. Background
c. Purpose
d. Scope
e. Test results discussion
f. Conclusions
g. Recommendations
h. References
i. Appendix

A.3.4.1 Introduction

Same as test plan; update as necessary.

A.3.4.2 Background

Same as test plan; update as necessary.

A.3.4.3 Purpose

Same as test plan; update as necessary.

A.3.4.4 Scope

Same as test plan; update as necessary.

A.3.4.5 Test Results Discussion

Present a summary of the significant findings to enable the reader to understand the test results without having to read the entire report. Highlight the technical information for the executive reader and reference the specifics about the test in the appendix on test results.

A.3.4.6 Conclusions

In the conclusions, indicate whether test item met or failed to meet the applicable HERO requirements of MIL-STD-464.

A.3.4.7 Recommendations

Based on the test results, provide recommendations to the test sponsor or program office about whether or not the test item should be considered as safe and reliable when exposed to the applicable EME levels of MIL-STD-464. If the test item did not meet the HERO requirements of MIL-STD-464, recommend appropriate restrictions on the use of the item. In addition, list all known current versions of the ordnance item, along with all applicable platform/systems and launchers by NSN, DOCIC, NALC, or other identifiers and make recommendations as to the suitability of each to meet the requirements of MIL-STD-464.

A.3.4.8 References

List all reference documents in the order in which they were mentioned in the test report. Include date and specify the revision number of the referenced document.

A.3.5 Appendix

The appendix should include the EID summary tables and the test results tables. The use of standard forms, data sheets, or questionnaires is encouraged. A sample data sheet is included below (see Table A-1). HERO test data presented in this appendix should include, but not be limited to the following:

a. Test item nomenclature: name, DODIC, NSN (this will be necessary for JOERAD entry)
b. Serial number(s) of test item
c. Model number(s) of test item
d. Test and instrumentation calibration data
e. Modification(s) to test item
f. Hardware configuration/S4 phases
g. All test item problems/failures
h. Results of all pretest, post-test, and other inspections of the test item
i. Facilities and hardware utilized for the test
j. Still photographs/diagrams of the test set-up
k. Still photographs/diagrams of the test instrumentation
l. Classification of each EID as a safety or reliability consequence

Detailed data requirements for each HERO test run include, but are not limited to, the following:

a. Test run number
b. Test frequency
c. Configuration of the test item, including orientation to the radiating antenna
d. EME desired and achieved, including electric field intensity in V/m or power density in mW/cm^2, polarization, modulation, and MAE levels (measured or extrapolated)
e. EME induced current or voltage in the EID
f. Reaction to the EME
g. Calculation of the test margin/criterion relative to the MNFC
h. Test observations/comments noted during the test.

TABLE A-1 Sample Data Sheet Format

SYSTEM: Joint Direct Attack Munition (JDAM)
DOCIC/NALC: NOT YET ASSIGNED
PLATFORM: F/A-18
LAUNCHER: BRU-32 Bomb Rack
STATION: 8
SYSTEM COMPONENT: FMU-139A/B Fuze
S4 PHASE(s) TESTED: Tests I and II - Staged and Storage
TEST RUN NO. P12

FREQ RANGE (MHz)	TEST FREQ (MHz)	TEST EME (V/m)	SPEC EME (V/m)	EID ID	FIRING AFFECTS	TEST % MNFC	MIL-STD-464 % MNFC
2-30	18.38	194	200	MK 20 BA*	Reliability	5.1	5.25

* Bellows actuator

CONCLUDING MATERIAL

Custodians:

Navy - SH
Army – SY
Air Force - 11

Preparing Activity:

DISA (DC5)
(Project EMCS – 0177)

Review Activities:

Air Force - 13, 19, 22, 84
Army - AC, AM, AR, AT, AV, CE, CR, GL, MD, MI, PT, TE
Navy – AS, CG, EC, MC, OS, YD
DTRA

This page left intentionally blank.

STANDARDIZATION DOCUMENT IMPROVEMENT PROPOSAL

INSTRUCTIONS

1. The preparing activity must complete blocks 1,2,3, and 8. In block 1, both the document number and revision letter should be given.
2. The submitter of this form must complete blocks 4,5,6, and 7.
3. The preparing activity must provide a reply within 45 days from receipt of the form.

NOTE: This form may not be used to request copies of documents, not to request waivers, or clarification of requirements on current contracts. Comments submitted on this form do not constitute or imply authorization to waive any portion of the referenced document(s) or to amend contractual requirements.

I RECOMMEND A CHANGE:	1. DOCUMENT NUMBER MIL-HDBK-240	2. DOCUMENT DATE (YYMMDD)

3. DOCUMENT TITLE
HAZARDS OF ELECTROMAGNETIC RADIATION TO ORDNANCE (HERO) TEST GUIDE

4. NATURE OF CHANGE (Identify paragraph number and include proposed rewrite, if possible. Attach extra sheets as needed.)

5. REASON FOR RECOMMENDATION

6. SUBMITTER

a. NAME (Last, First, Middle Initial)	b. ORGANIZATION	
c. ADDRESS (Include Zip Code)	d. TELEPHONE (Include Area Code) (1) Commercial (2) AUTOVON (If applicable)	7. DATE SUBMITTED (YYMMDD)

8. PREPARING ACTIVITY

A. NAME DISA/JSC J5	d. TELEPHONE (Include Area Code) (1) Commercial (2) AUTOVON (If applicable) (410) 293-4958
C. ADDRESS (Include Zip Code) DISA/Joint Spectrum Center 2004 Turbot Landing Annapolis, MD 21402-5064	IF YOU DO NOT RECEIVE A REPLY WITHIN 45 DAYS, CONTACT: Defense Quality and Standardization Office 5203 Leesburg Pike, Suite 1403, Falls Church, VA 22041-3466 Telephone (703) 756-2340 AUTOVON 289-2340

DD FORM 1426