NOTICE OF CHANGE

NOT MEASUREMENT SENSITIVE

MIL-HDBK-274(AS)
NOTICE 1
29 June 1990

MILITARY HANDBOOK

ELECTRICAL GROUNDING
FOR AIRCRAFT SAFETY

TO ALL HOLDERS OF MIL-HDBK-274(AS):

1. THE FOLLOWING PAGES OF MIL-HDBK-274(AS) HAVE BEEN REVISED AND SUPERSEDE THE PAGES LISTED:

NEW PAGE	DATE	SUPERSEDED PAGE	DATE
v	29 June 1990	v	1 November 1983
vi	1 November 1983	vi	Reprinted Without Change
1	1 November 1983	1	Reprinted Without Change
2	29 June 1990	2	1 November 1983
3	29 June 1990	3	1 November 1983
4	29 June 1990	4	1 November 1983
23	29 June 1990	23	1 November 1983
24	1 November 1983	24	Reprinted Without Change
25	29 June 1990	25	1 November 1983
26	29 June 1990	26	1 November 1983
27	29 June 1990	27	1 November 1983
28	29 June 1990	28	1 November 1983
29	29 June 1990	29	1 November 1983
30	29 June 1990	30	1 November 1983
31	29 June 1990	31	1 November 1983
32	1 November 1983	32	Reprinted Without Change
35	29 June 1990	35	1 November 1983
36	1 November 1983	36	Reprinted Without Change
37	1 November 1983	37	Reprinted Without Change
38	29 June 1990	38	1 November 1983
39	29 June 1990	39	1 November 1983
40	29 June 1990	40	1 November 1983
41	29 June 1990	41	1 November 1983
42	29 June 1990	42	1 November 1983
43	29 June 1990	43	1 November 1983
44	29 June 1990	44	1 November 1983
44a	29 June 1990	New Page	
71	1 November 1983	71	Reprinted Without Change
72	29 June 1990	72	1 November 1983
73	1 November 1983	73	Reprinted Without Change
74	29 June 1990	74	1 November 1983
75	29 June 1990	75	1 November 1983
76	29 June 1990	76	1 November 1983
77	29 June 1990	77	1 November 1983
78	29 June 1990	78	1 November 1983
79	29 June 1990	79	1 November 1983

AMSC N/A

AREA EMCS

DISTRIBUTION STATEMENT A. Approved for public release; distribution is unlimited.

NEW PAGE	DATE	SUPERSEDED PAGE	DATE
80	29 June 1990	80	1 November 1983
131	1 November 1983	131	Reprinted Without Change
132	29 June 1990	132	1 November 1983
137	29 June 1990	137	1 November 1983
138	1 November 1983	138	Reprinted Without Change
149	29 June 1990	149	1 November 1983
150	1 November 1983	150	Reprinted Without Change
150a	29 June 1990	New Page	
159	1 November 1983	159	Reprinted Without Change
160	29 June 1990	160	1 November 1983
160a	29 June 1990	New Page	
161	29 June 1990	161	1 November 1983
162	29 June 1990	162	1 November 1983
163	29 June 1990	163	1 November 1983
164	1 November 1983	164	Reprinted Without Change
167	29 June 1990	167	1 November 1983
168	29 June 1990	168	1 November 1983
179	1 November 1983	179	Reprinted Without Change
180	29 June 1990	180	1 November 1983
181	29 June 1990	181	1 November 1983
182	29 June 1990	182	1 November 1983
183	1 November 1983	183	Reprinted Without Change
184	29 June 1990	184	1 November 1983
237	1 November 1983	237	Reprinted Without Change
238	29 June 1990	238	1 November 1983
239	29 June 1990	239	1 November 1983
240	29 June 1990	240	1 November 1983
241	29 June 1990	241	1 November 1983
242	1 November 1983	242	Reprinted Without Change
263	1 November 1983	263	Reprinted Without Change
264	29 June 1990	264	1 November 1983
271	1 November 1983	271	Reprinted Without Change
272	29 June 1990	272	1 November 1983
277	29 June 1990	277	1 November 1983

2. RETAIN THIS NOTICE AND INSERT BEFORE TABLE OF CONTENTS.

3. Holders of MIL-HDBK-274(AS) will verify that page changes and additions indicated above have been entered. This notice page will be retained as a check sheet. This issuance, together with appended pages, is a separate publication. Each notice is to be retained by stocking points until the military standard is completely revised or canceled.

Preparing Activity:
Navy - AS
(Project EMCS-N127)

CONTENTS

			Page
Paragraph	1.0	SCOPE	1
	1.1	Purpose	1
	1.2	Referenced Documents	2
	2.0	AIRCRAFT GROUNDING AND BONDING METHODS	4
	2.1	Land-based aircraft	4
	2.2	Carrier-based aircraft	149
	2.3	Helicopter hovering	205
	2.4	External electrical power	209
	2.5	Aircraft fueling when using external electrical power (A-6)	217
	2.6	Hot fueling	220
3.0		OPERATIONAL GROUNDING CONCERNS	222
	3.1	Static electricity	222
	3.2	Energy sources	223
	3.3	Operational procedures	231
	3.4	Special considerations	235
	3.5	Actual grounding problems	238
	3.6	Measurement of static ground and electrical power ground points	240
	3.7	Grounding hardware/receptacle considerations	240
	3.8	Grounding hardware military specification sheet reference list	241
	4.0	THEORETICAL BASIS FOR AIRCRAFT GROUNDING	242
	4.1	Electrostatic theory	242
	4.2	Scenarios	242
	4.3	Energy sources	242
	4.4	Airframe/personnel electrical parameters	257
	4.5	Damage threshold levels	260
	4.6	Analysis	261
	5.0	TESTING AND IDENTIFICATION OF GROUND POINTS	265
	5.1	Theoretical background	265
	5.2	Measurement equipment	265
	5.3	Ground points measurement procedures	269
	5.4	Schedule for resistance testing of ground points	272
	5.5	Identification of ground points	272
	5.6	The use of mooring eyes as static ground points	272
	5.7	Resistance measurements for alternate grounding and bonding points	273
	6.0	INFORMATION FOR GUIDANCE ONLY	277
	6.1	Changes from previous issue	277
	6.2	Subject term (keyword) listing	277

Supersedes page v of 1 November 1983

FIGURES

			Page
Figure	2-1	A-3 aircraft grounding, parked evolution	6
	2-2	A-3 aircraft grounding, fueling/defueling evolution	7
	2-3	Hangar-based A-3 aircraft grounding, maintenance evolution	8
	2-4	Apron-based A-3 aircraft grounding, maintenance evolution	10
	2-5	A-4 aircraft grounding, parked evolution	11
	2-6	A-4 aircraft grounding, fueling/defueling evolution	13
	2-7	Hangar-based A-4 aircraft grounding, maintenance evolution	14
	2-8	Apron-based A-4 aircraft grounding, maintenance evolution	15
	2-9	A-4 aircraft grounding, stores loading/unloading evolution	17
	2-10	A-6 aircraft grounding, parked evolution	18
	2-11	A-6 aircraft grounding, fueling/defueling evolution	19
	2-12	Hangar-based A-6 aircraft grounding, maintenance evolution	21
	2-13	Apron-based A-6 aircraft grounding, maintenance evolution	22
	2-14	A-6 aircraft grounding, stores loading/unloading evolution	24
	2-15	A-7 aircraft grounding, parked evolution	25
	2-16	A-7 aircraft grounding, fueling/defueling evolution	26
	2-17	Hangar-based A-7 aircraft grounding, maintenance evolution	27
	2-18	Apron-based A-7 aircraft grounding, maintenance evolution	29
	2-19	A-7 aircraft grounding, stores loading/unloading evolution	31
	2-20	AH-1 aircraft grounding, parked evolution	32
	2-21	AH-1 aircraft grounding, fueling/defueling evolution	33
	2-22	Hangar-based AH-1 aircraft grounding, maintenance evolution	34
	2-23	Apron-based AH-1 aircraft grounding, maintenance evolution	36
	2-24	AH-1 aircraft grounding, stores loading/unloading evolution	37
	2-25	AV-8 aircraft grounding, parked evolution	38
	2-26	AV-8 aircraft grounding, fueling/defueling evolution	39
	2-27	Hangar-based AV-8 aircraft grounding, maintenance evolution	41
	2-28	Apron-based AV-8 aircraft grounding, maintenance evolution	42
	2-29	AV-8 aircraft grounding, stores loading/unloading evolution	44

SECTION 1

1.0 SCOPE

1.1 Purpose. The purpose of this handbook is to provide aircraft maintenance personnel with the information required for electrical safety grounding of each type of operational aircraft in the U.S. Navy inventory.* In addition, this handbook provides background information pertaining to the operational concerns for aircraft grounding, static electricity theory and how it affects aircraft, and techniques used for measurement of grounding points. This handbook is divided into five sections as follows:

SECTION 1 - SCOPE
SECTION 2 - AIRCRAFT GROUNDING AND BONDING METHODS
SECTION 3 - OPERATIONAL GROUNDING CONCERNS
SECTION 4 - THEORETICAL BASIS FOR AIRCRAFT GROUNDING
SECTION 5 - TESTING AND IDENTIFICATION OF GROUND POINTS

1.1.1 This handbook is intended for use by all U.S. Naval aircraft operational and maintenance personnel including maintenance officers and public works officials for the purposes of ensuring that each aircraft is properly grounded and that the grounding system is adequate for this purpose. Sections 1 and 2 are intended primarily for use by line maintenance personnel. Sections 3 and 4 contain material intended for those desiring to obtain additional theoretical and background information. Section 5 is essential for public works department personnel. Each section is designed to stand alone.

1.1.2 The information contained in Section 2 is intended to be used by line maintenance personnel. This section provides step-by-step instructions for grounding each of the aircraft in the Navy inventory during each of the following evolutions: parked, fueling/defueling, maintenance, and stores loading/unloading. Each evolution is shown in a separate illustration depicting the particular aircraft with proper grounding/bonding cables connected. The illustrations show primary grounding points and also provide alternate grounding points should the primary grounding point be inaccessible. Also provided on the illustrations are pertinent cautions and warnings to be observed during the grounding procedure. Accompanying each illustration is a step-by-step procedure for grounding/bonding the particular aircraft.

1.1.3 Section 3 provides background and general information necessary to understand the rationale behind the requirements for grounding and bonding. This section also discusses the grounding problems and hazards encountered in the everyday ground handling of aircraft during flight operations. Energy sources and grounding effects are identified. The aircraft scenarios or servicing situations (evolutions) are introduced and the aircraft safety problems associated with each are described. In addition, a brief discussion of static electricity and how it affects aircraft operation is provided.

*U.S. Navy aircraft use power equipment not equipped with ground fault interrupters (GFI).

1.1.4 Section 4 details basic electrostatic theory and its application to aircraft grounding. Sources of static electricity associated with aircraft operation are also described. These include triboelectric effects, fuel flow, induced charge, and friction. Hazards from ground power faults, rf energy, and lightning are presented. Also included in this section are descriptions of aircraft electrical parameters and a discussion of hazardous threshold and the possible dangers they present to personnel and aircraft safety. The section also illustrates that proper grounding will reduce these hazards.

1.1.5 Section 5 is intended for use by the public works department personnel and provides a description of the methods and techniques used to measure the resistance of the grounding system. Also included in Section V is a suggested schedule for accomplishing the measurement of ground points, identifying ground points, the use of mooring eyes as static ground points, and a discussion of the test equipment used to measure ground point resistance.

1.2 Referenced Documents. The following documents are referenced in this handbook.

Document No.	Title
MIL-C-83413	Connector, Electric Ground
MIL-C-83413/1	Connectors and Assemblies, Electrical, Aircraft Grounding: Type I Grounding Assembly, Discharger, Electrostatic
MIL-C-83413/3	Connectors and Assemblies, Electrical, Aircraft Grounding: Type III Grounding Assembly, Discharger, Electrostatic
MIL-C-83413/7	Connectors and Assemblies, Electrical, Aircraft Grounding: Grounding Clamp Connector for Types I and III Grounding Assemblies Clip, Electrical
MS3493	Connector, Plug and Cap Electric, Grounding
MS25083	Jumper Assembly, Electric Bonding and Current Return
MS25486	Connector, Plug, Attachable, External Electric Power, Aircraft, 115/200 volt 400 hertz
MS25487	Connector, Plug, Attachable, External Electric Power, Aircraft, 28 Volt DC, Jet Starting
MS25488	Connector, Plug, Attachable, External Electric Power, Aircraft, 28 Volt DC Operating Power
MS33645	Receptacle, Grounding, Installation of
MS90298	Connector, Receptacle, Electric, Grounding
MIL-HDBK-419	Grounding, Bonding, and Shielding for Electronic Equipments and Facilities, 21 January 1982

Document No.	Title
NAVAIR AIR-5181-1000	Airframe Electrical Grounding Requirements Program Final Report, 17 Feb 1981
NAVAIR 00-80T-96	U.S. Navy Support Equipment, Basic Handling and Safety Manual, 1 April 1981
NAVAIR 19-45-1	Index and Applications Tables for Mobile Electric Power Plants, 1 September 1972
NAVSEA OP4 Vol. 2	Ammunition Afloat, 15 February 1972
NAVSEA OP5 Vol. 1	Ammunition and Explosives Ashore, 15 October 1974
COMNAVAIRPAC/ COMNAVAIRLANTINST 3100.4A	Air Department Standard Operating Procedures (SOP)

SECTION 2

2.0 AIRCRAFT GROUNDING AND BONDING METHODS

This section provides step-by-step procedures for grounding and bonding operational aircraft in the Navy inventory. Various handling evolutions, both landbased and carrier-based, of the different aircraft are described and illustrated with appropriate warnings and cautions. Note that the word "carrier" is meant to refer to any ship which supports aircraft flight operations.

By referring to the particular aircraft procedures in this section and the applicable aircraft NATOPS, organizational maintenance personnel will be able to properly determine aircraft grounding requirements before beginning other servicing. Recommended grounding and bonding locations are illustrated. If conditions prevent the use of these locations, a resistance check using a milliohmmeter must be performed to verify that the alternate location is an acceptable grounding or bonding attachment point. A location is an acceptable grounding or bonding point if the resistance measured from the point to the airframe is less than 10 milliohms. Using a milliohmmeter (Shallcross Model 670A or equivalent), connect one probe to the known aircraft grounding point and the other probe to the proposed grounding point. Observe the milliohmmeter for a reading of less than 10 milliohms. If the milliohmmeter reading is less than 10 milliohms, the proposed grounding point is acceptable. Painted, corroded, dirty, greasy areas or areas of composite materials should not be used for grounding points. In addition, if the intended grounding point is loosely connected to the aircraft structure by way of bearings or springs, an unacceptable intermittent ground or bond could result.

When employing grounding cables, the specific type of connector required on the ends will be determined by the aircraft type. Many Navy aircraft do not have grounding receptacles available in other than the fueling area, and they are therefore not readily available for use as the static grounding point on the aircraft. In these instances a cable having an M83413-1 connector on each end may be used, one end attached to an approved static ground point, the other to a clean metal area of the aircraft.

Cables shall be of 7 x 7 construction, 0.094 inch nominal diameter wire rope in accordance with M83413-1 or with MIL-C-83413/7 clamps at each end. Cable length shall be determined by user requirements but shall not exceed 40 feet. The maximum resistance of all cable configurations shall not exceed 10 ohms. The cables must be identified and serialized. As a minimum, resistance of complete cable assemblies must be measured, recorded and verified annually.

2.1 Land-Based Aircraft. The following paragraphs provide step-by-step procedures for grounding land-based aircraft.

Evolutions requiring external power are detailed in paragraphs 2.4 through 2.6.

Fueling evolutions shown here do not indicate external electrical power. These illustrations apply to gravity fueling as well as hot fueling from fuel trucks. Figures 2-160 and 2-161 illustrate grounding and bonding procedures for the A-6 using external electrical power during fueling. The grounding and bonding procedures for other aircraft requiring external electrical power during fueling are similar.

2.1.17 A-6 stores loading/unloading evolution. To ground A-6 aircraft during stores loading or unloading, proceed as follows (see figure 2-14):

a. Attach grounding cable with M83413-1 electrical ground connector (clamp type) to a certified static ground or padeye (1).
b. Connect free end of grounding cable to tail bumper (2). If this location is not accessible, then connect grounding cable to main gear tiedown ring (typical alternate grounding point).
c. To remove grounding cable, reverse above procedures.

2.1.18 A-7 parked evolution. To ground A-7 aircraft when in the parked evolution, proceed as follows (see figure 2-15):

a. Attach grounding cable with M83413-1 electrical ground connector (clamp type) to a certified static ground or padeye (1).
b. Connect free end of grounding cable to grounding receptacle in left-hand wheelwell (2).
c. If grounding receptacles are not accessible, then using a grounding cable with M83413-1 electrical ground connector at each end, follow step a, and connect free end of grounding cable to nose gear tiedown ring (typical alternate grounding point).
d. To remove grounding cable, reverse above procedures.

2.1.19 A-7 fueling/defueling evolution. To ground A-7 aircraft when fueling or defueling, proceed as follows (see figure 2-16):

a. Attach grounding cable with M83413-1 electrical ground connector (clamp type) to a certified static ground or padeye (1).
b. Connect free end of grounding cable to grounding receptacle in left-hand wheelwell (2).
c. If grounding receptacles are not accessible, then using a grounding cable with M83413-1 electrical ground connector at each end, follow step a, and connect free end of grounding cable to nose gear tiedown ring (typical alternate grounding point).
d. If using fuel truck, attach its grounding cable to a certified static ground or padeye (3).
e. Connect fuel truck bonding cable to nose gear tiedown ring (4).
f. When fueling/defueling evolution has been completed, wait a minimum of 2 min before removing bonding cable.
g. To remove bonding or grounding cable, reverse above procedures.

2.1.20 A-7 hangar-based maintenance evolution. To ground A-7 aircraft during maintenance in the hangar, proceed as follows (see figure 2-17):

a. Attach grounding cable with M83413-1 electrical ground connector (clamp type) to a certified power ground (1).
b. Connect free end of grounding cable to grounding receptacle in left-hand wheelwell (2).

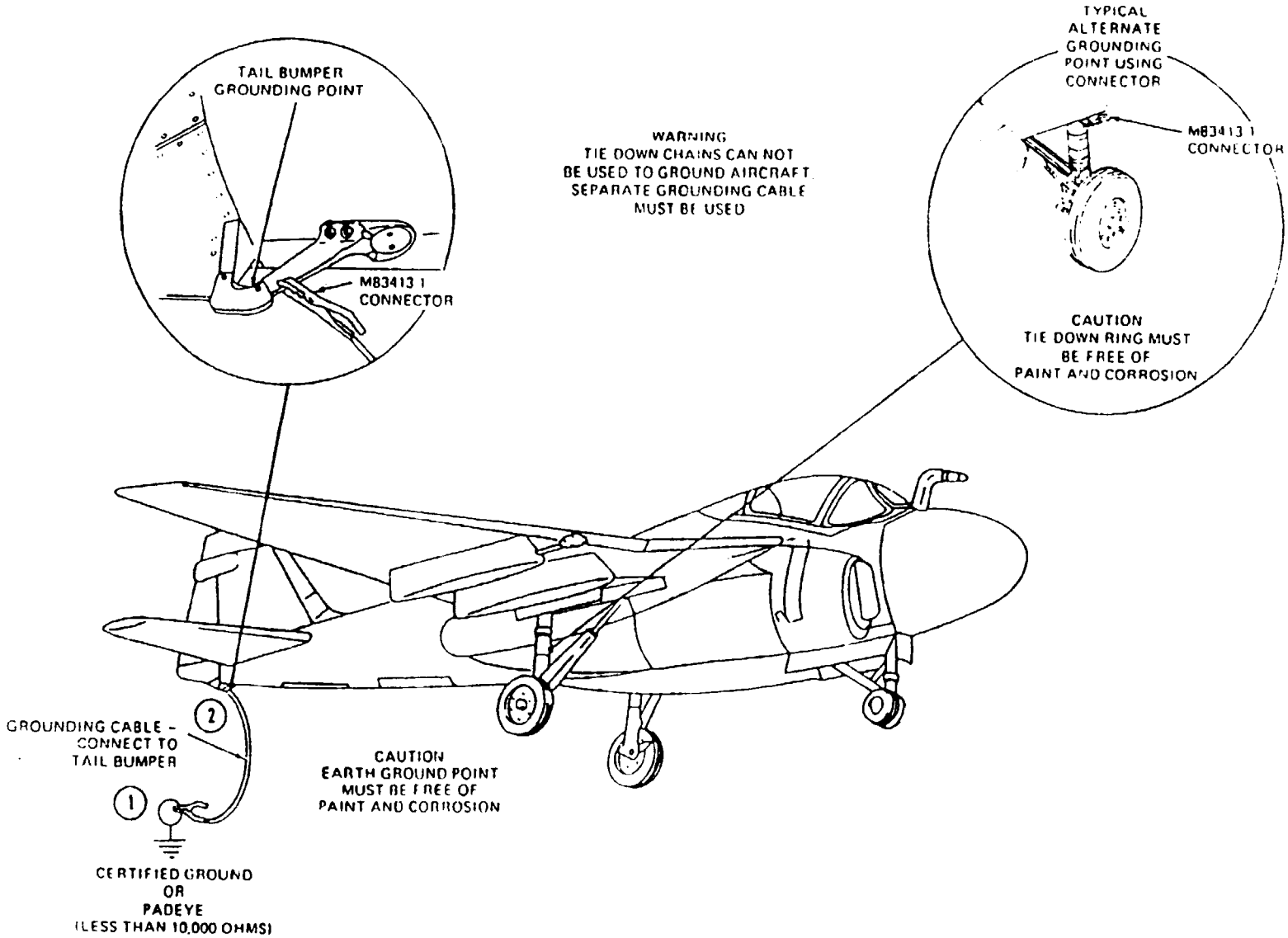

FIGURE 2-14. A-6 aircraft grounding, stores loading/unloading evolution.

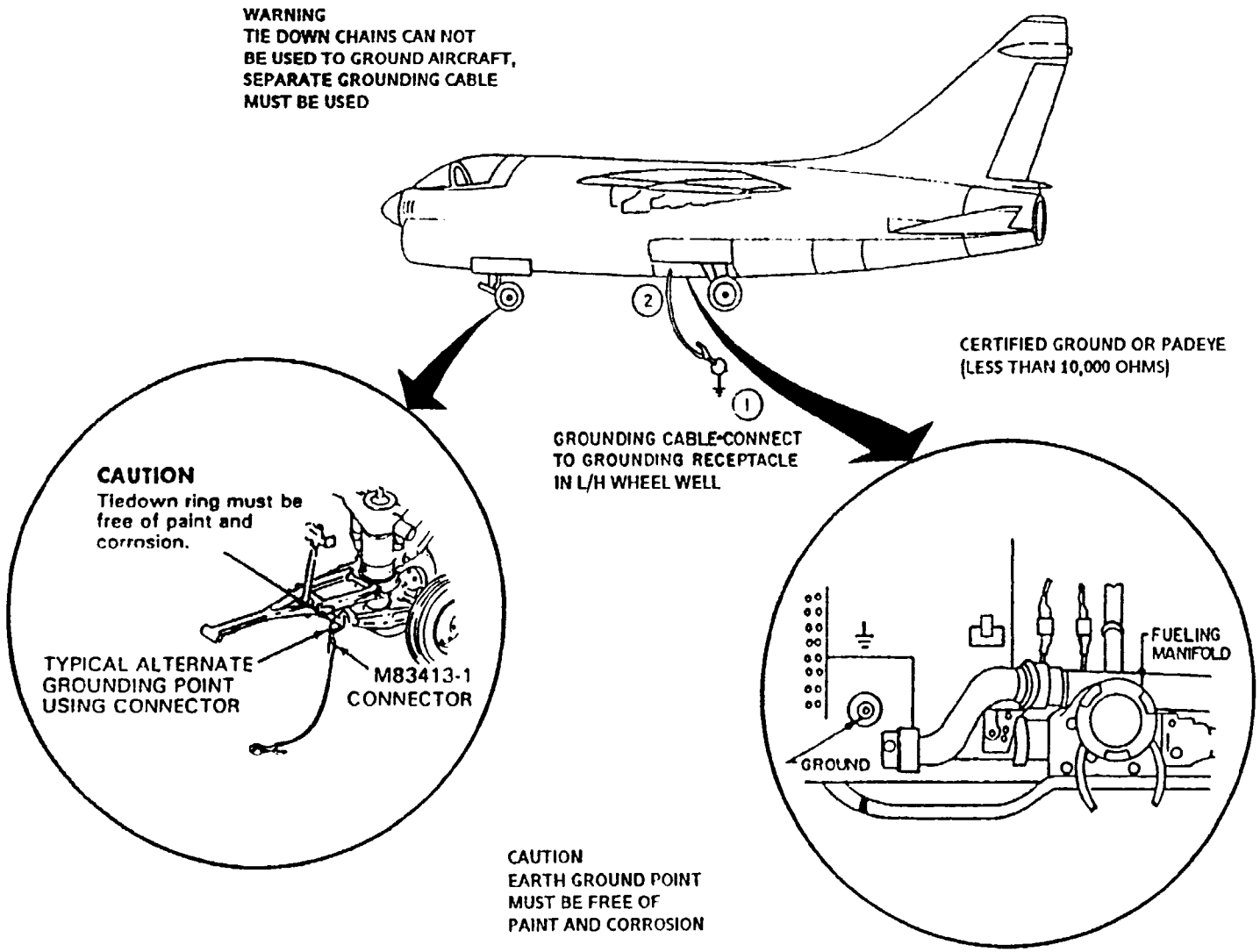

FIGURE 2-15. A-7 aircraft grounding, parked evolution.

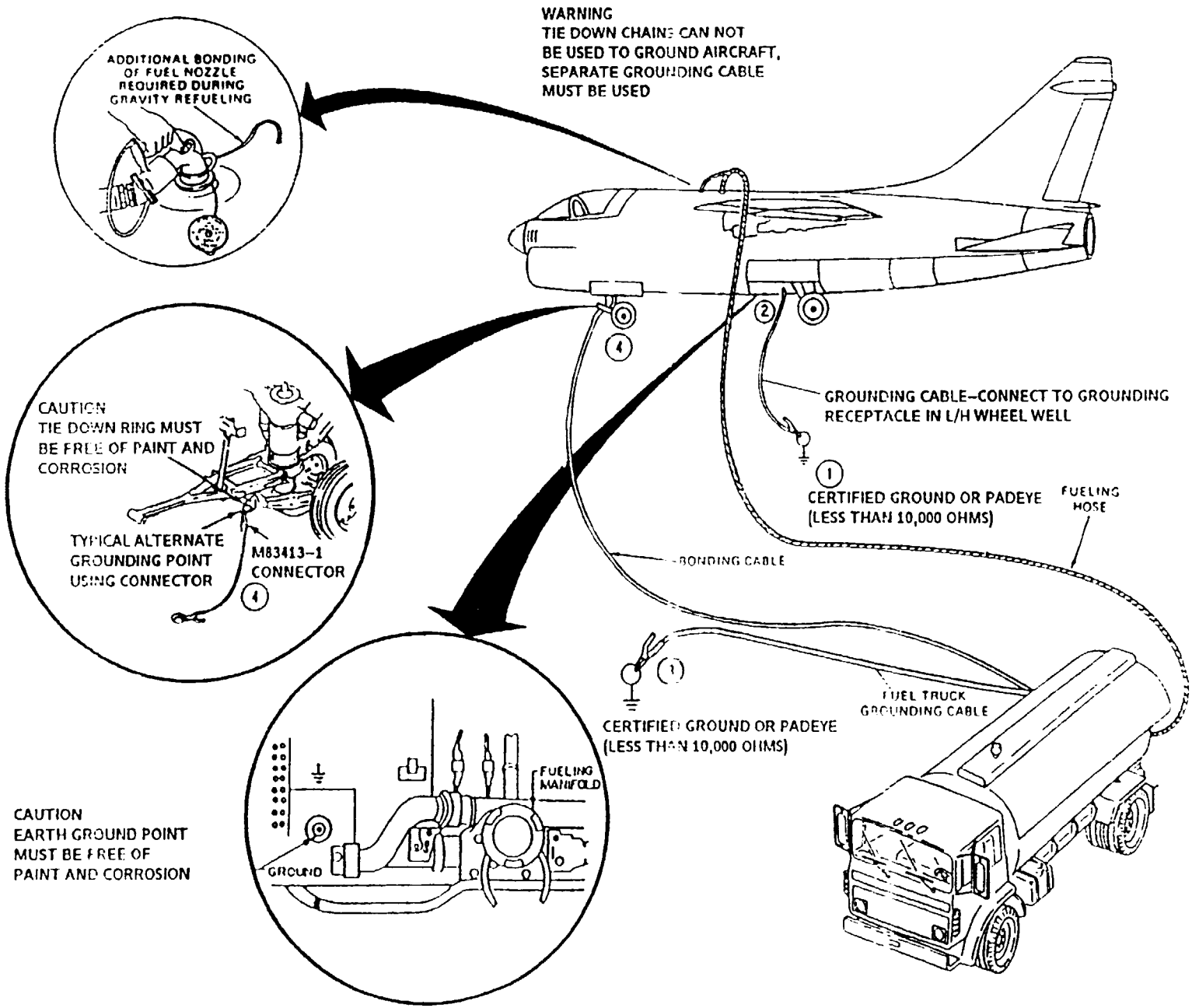

FIGURE 2-16. A-7 aircraft grounding, fueling/defueling evolution.

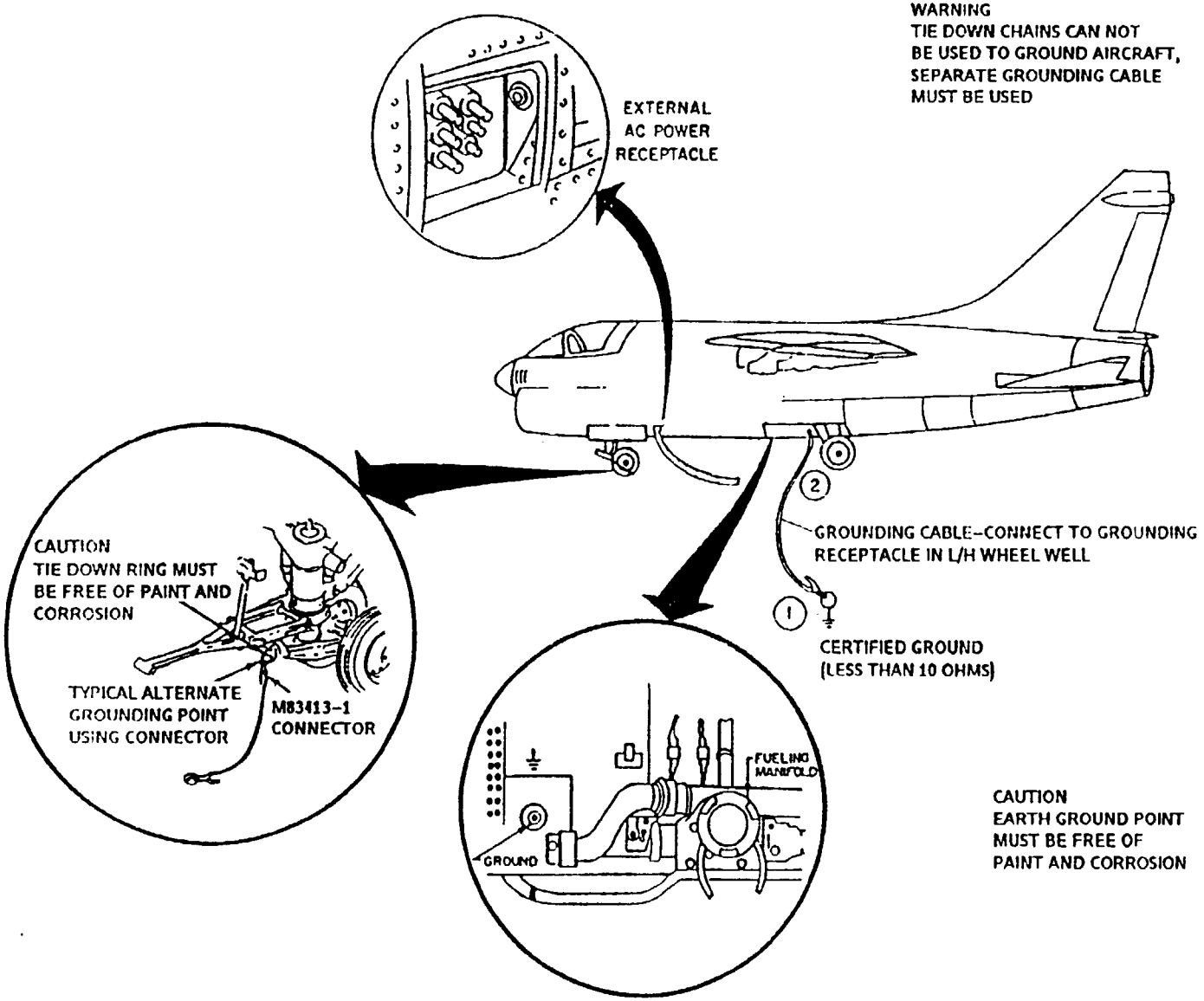

FIGURE 2-17. Hangar-based A-7 aircraft grounding, maintenance evolution.

c. If grounding receptacles are not accessible, then using a grounding cable with M83413-1 electrical ground connector at each end, follow step a, and connect free end of grounding cable to nose gear tiedown ring (typical alternate grounding point).
d. To remove grounding cable, reverse above procedures.

2.1.21 A-7 apron-based maintenance evolution (with MEPP plugged into aircraft). To ground A-7 aircraft when in the maintenance evolution on the apron with MEPP plugged into aircraft, proceed as follows (see figure 2-18):

a. Attach grounding cable with M83413-1 electrical ground connector (clamp type) to a certified static ground or padeye (1).

NOTE: If the MEPP is an electrically-driven type, then a power ground must be used.

b. Connect free end of grounding cable to grounding receptacle in left-hand wheelwell (2).
c. If grounding receptacles are not accessible, then using a grounding cable with M83413-1 electrical ground connector at each end, follow step a, and connect free end of grounding cable to nose gear tiedown ring (typical alternate grounding point).
d. Attach bonding cable with M83413-1 electrical ground connector to nose gear tiedown ring (3).
e. Connect free end of bonding cable to a bare metal area on the MEPP (4).
f. To remove grounding or bonding cable, reverse above procedures.

2.1.22 A-7 apron-based maintenance evolution (using FLEDS). To ground A-7 aircraft when in the maintenance evolution on the apron using FLEDS, proceed as follows (see figure 2-18):

a. Attach grounding cable with M83413-1 electrical ground connector (clamp type) to a certified static ground or padeye (1).
b. Connect free end of grounding cable to grounding receptacle in left-hand wheelwell (2).
c. If grounding receptacles are not accessible, then using a grounding cable with M83413-1 electrical ground connector at each end, follow step a, and connect free end of grounding cable to nose gear tiedown ring (typical alternate grounding point).
d. Attach bonding cable with M83413-1 electrical ground connector to nose gear tiedown ring (3).
e. Connect free end of bonding cable to a bare metal area on the DBA such as the stud or bolt (4) (see figure 2-155).
f. To remove grounding or bonding cable, reverse above procedures.

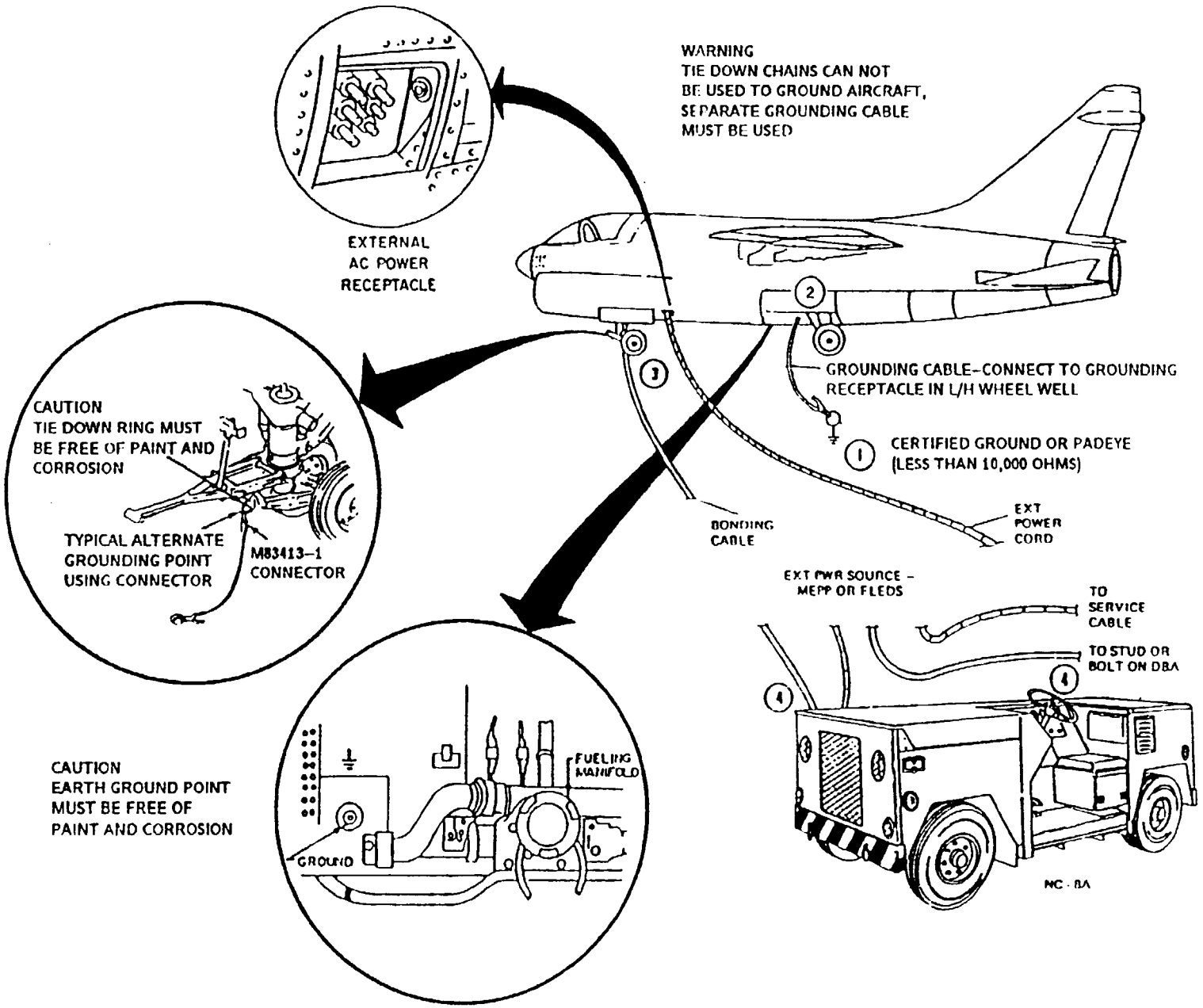

FIGURE 2-18. Apron-based A-7 aircraft grounding, maintenance evolution.

2.1.23 A-7 stores loading/unloading evolution. To ground A-7 aircraft during stores loading or unloading, proceed as follows (see figure 2-19):

a. Attach grounding cable with M83413-1 electrical ground connector (clamp type) to a certified static ground or padeye (1).
b. Connect free end of grounding cable to grounding receptacle in left-hand wheelwell (2).
c. If grounding receptacles are not accessible, then using a grounding cable with M83413-1 electrical ground connector at each end, follow step a, and connect free end of grounding cable to nose gear tiedown ring (typical alternate grounding point).
d. To remove grounding cable, reverse above procedures.

2.1.24 AH-1 parked evolution. To ground AH-1 aircraft when in the parked evolution, proceed as follows (see figure 2-20):

a. Attach grounding cable with M83413-1 electrical ground connector (clamp type) to a certified static ground or padeye (1).
b. Connect free end of grounding cable to front right towing ring (2). If this location is not accessible, then connect grounding cable to front left towing ring (typical alternate grounding point).
c. To remove grounding cable, reverse above procedures.

2.1.25 AH-1 fueling/defueling evolution. To ground AH-1 aircraft when fueling or defueling, proceed as follows (see figure 2-21):

a. Attach grounding cable with M83413-1 electrical ground connector (clamp type) to a certified static ground or padeye (1).
b. Connect free end of grounding cable to front right towing ring (2). If this location is not accessible, then connect grounding cable to front left towing ring (typical alternate grounding point).
c. If using fuel truck, attach its grounding cable to a certified static ground or padeye (3).
d. Connect fuel truck bonding cable to front right towing ring (4).
e. When fueling/defueling evolution has been completed, wait a minimum of 2 min before removing bonding cable.
f. To remove grounding or bonding cable, reverse above procedures.

2.1.26 AH-1 hangar-based maintenance evolution. To ground AH-1 aircraft during maintenance evolution in the hangar, proceed as follows (see figure 2-22):

a. Attach grounding cable with M83413-1 electrical ground connector (clamp type) to a certified power ground (1).
b. Connect free end of grounding cable to front right towing ring (2). If this location is not accessible, then connect grounding cable to front left towing ring (typical alternate grounding point).
c. To remove grounding cable, reverse above procedures.

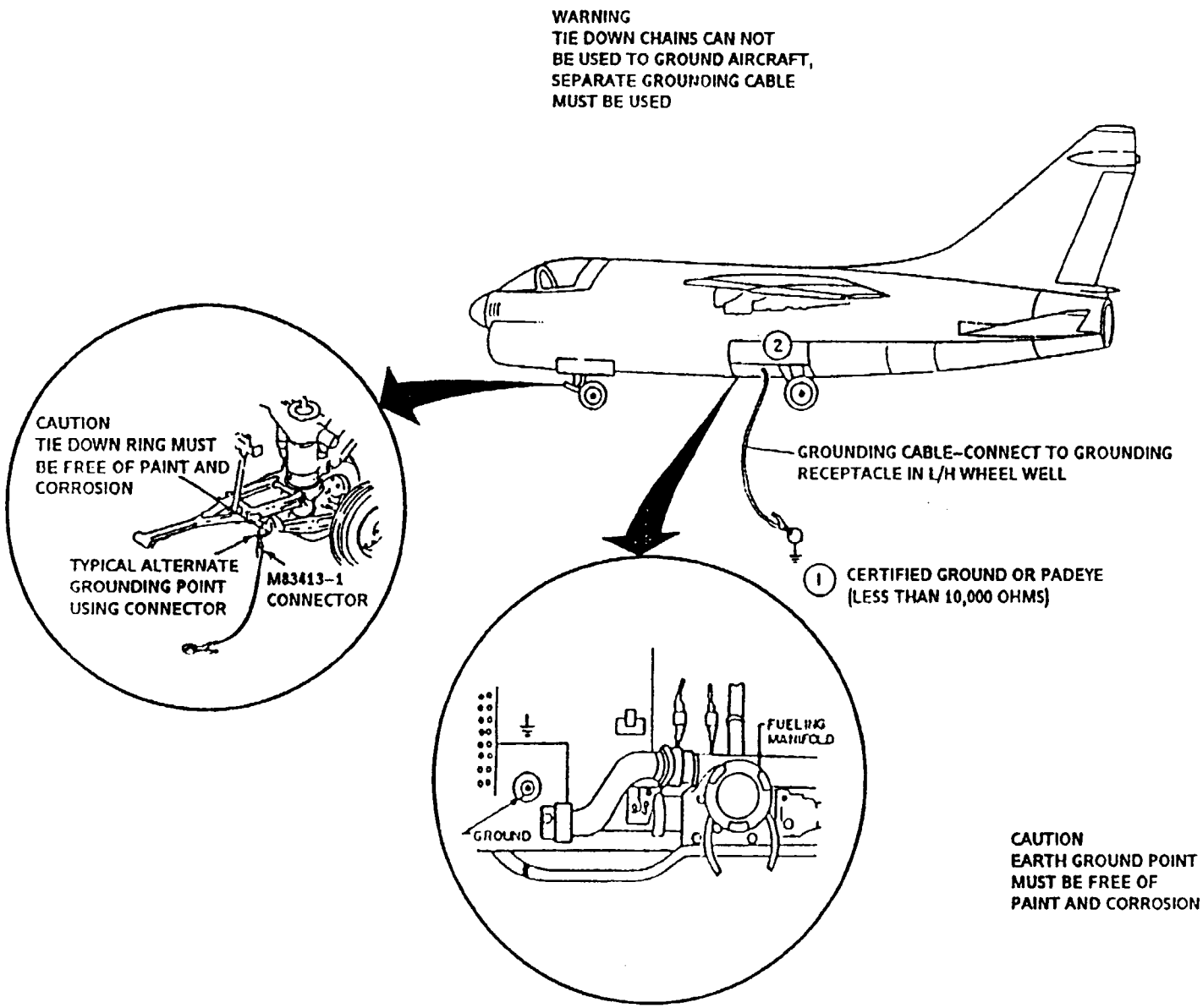

FIGURE 2-19. A-7 aircraft grounding, stores loading/unloading evolution.

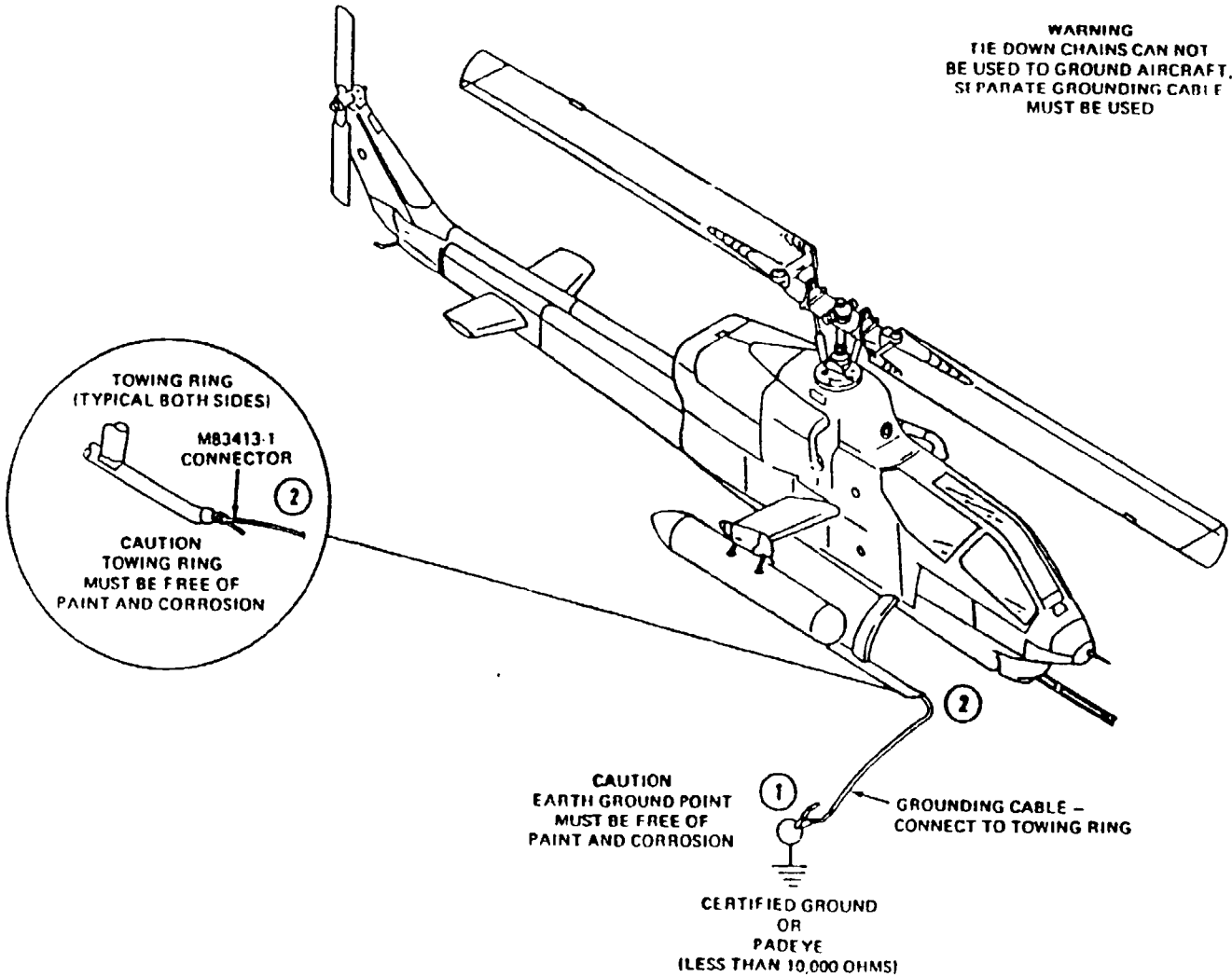

FIGURE 2-20. AH-1 aircraft grounding, parked evolution.

2.1.27 AH-1 apron-based maintenance evolution (with MEPP plugged into aircraft). To ground AH-1 aircraft when in the maintenance evolution on the apron with MEPP plugged into aircraft, proceed as follows (see figure 2-23):

a. Attach grounding cable with M83413-1 electrical ground connector (clamp type) to a certified static ground or padeye (1).

NOTE: If the MEPP is an electrically-driven type, then a power ground must be used.

b. Connect free end of grounding cable to front right towing ring (2). If this location is not accessible, then connect grounding cable to front left towing ring (typical alternate grounding point).

NOTE: If the MEPP is a diesel engine-driven type, then the following bonding requirement is waived.

c. Attach bonding cable with M83413-1 electrical ground connector to front right towing ring (3).
d. Connect free end of bonding cable to a bare metal area on the MEPP (4).
e. To remove grounding or bonding cable, reverse above procedures.

2.1.28 AH-1 stores loading/unloading evolution. To ground AH-1 aircraft during stores loading or unloading, proceed as follows (see figure 2-24):

a. Attach grounding cable with M83413-1 electrical ground connector (clamp type) to a certified static ground or padeye (1).
b. Connect free end of grounding cable to front right towing ring (2). If this location is not accessible, then connect grounding cable to front left towing ring (typical alternate grounding point).
c. To remove grounding cable, reverse above procedures.

2.1.29 AV-8 parked evolution. To ground AV-8 aircraft when in the parked evolution, proceed as follows (see figure 2-25):

a. Attach grounding cable with M83413-1 electrical ground connector (clamp type) to a certified static ground or padeye (1).
b. Connect free end of grounding cable to outrigger gear tiedown ring (2). If this location is not accessible, then connect grounding cable to bottom part of outrigger gear leg (typical alternate grounding point) or to grounding point under main wing tips (2a) (as applicable) or grounding point on forward fuselage (2b) (as applicable).
c. To remove grounding cable, reverse above procedures.

2.1.30 AV-8 fueling/defueling evolution. To ground AV-8 aircraft when fueling or defueling, proceed as follows (see figure 2-26):

a. Attach grounding cable with M83413-1 electrical ground connector (clamp type) to a certified static ground or padeye (1).

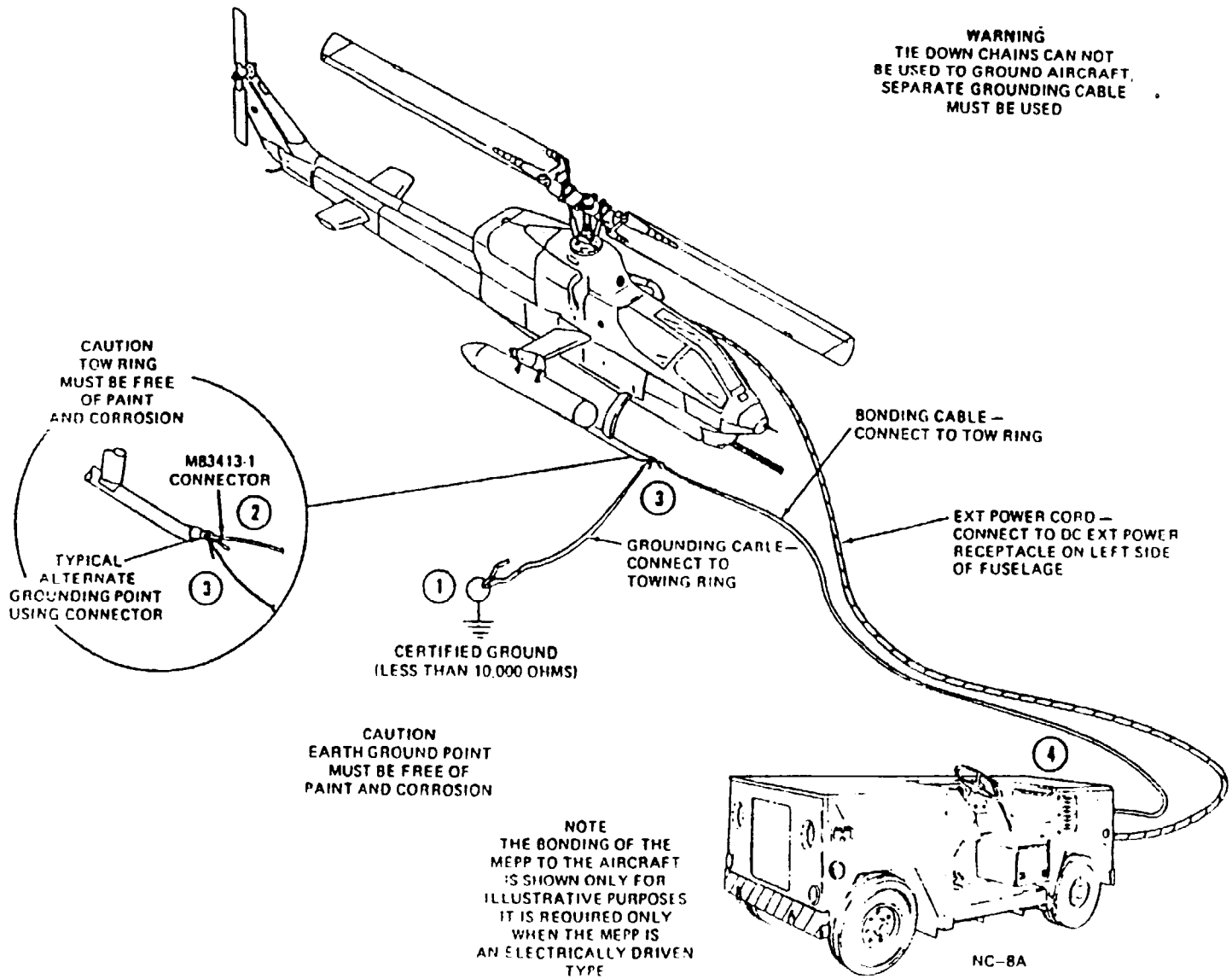

FIGURE 2-23. Apron-based AH-1 aircraft grounding, maintenance evolution.

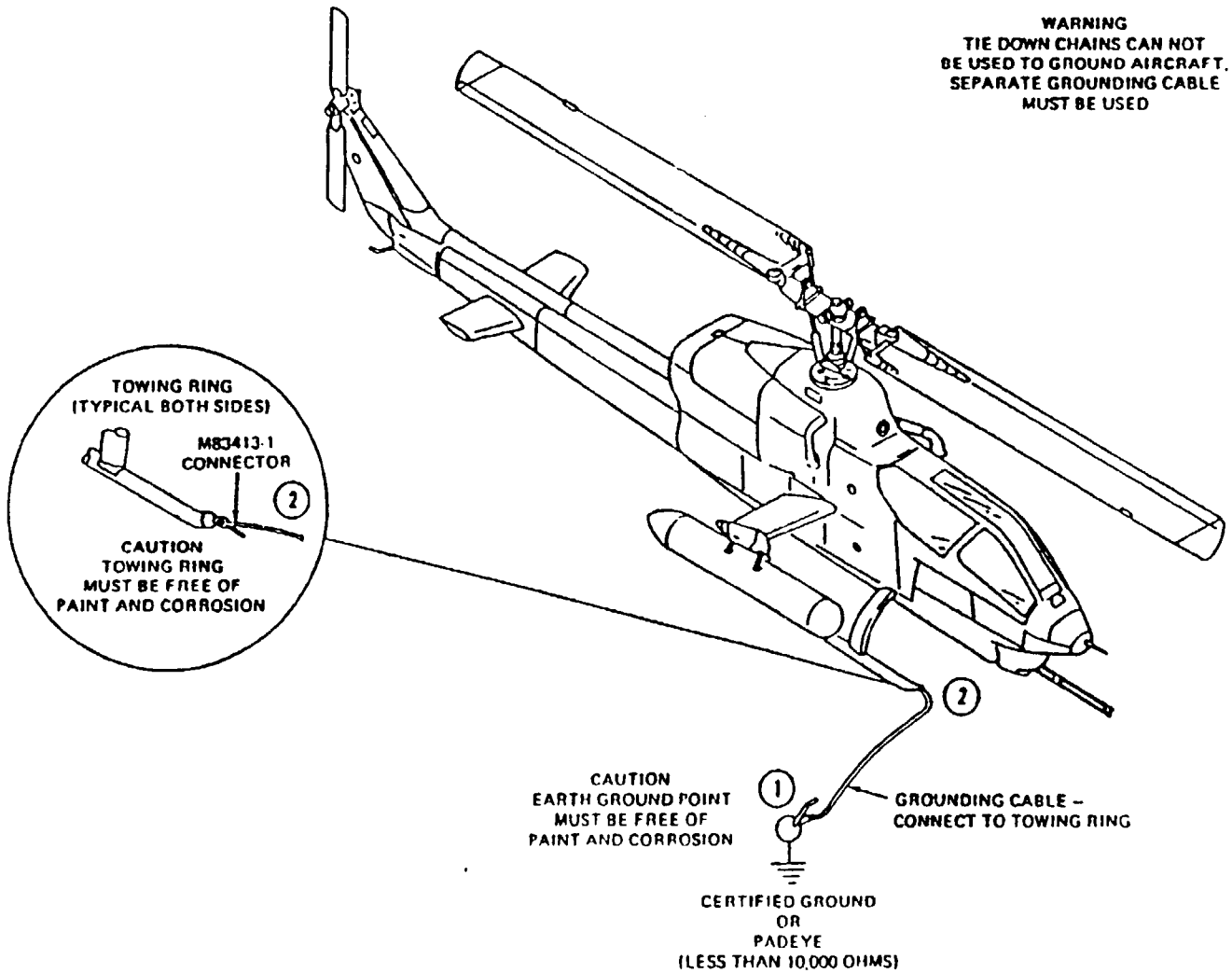

FIGURE 2-24. AH-1 aircraft grounding, stores loading/unloading evolution.

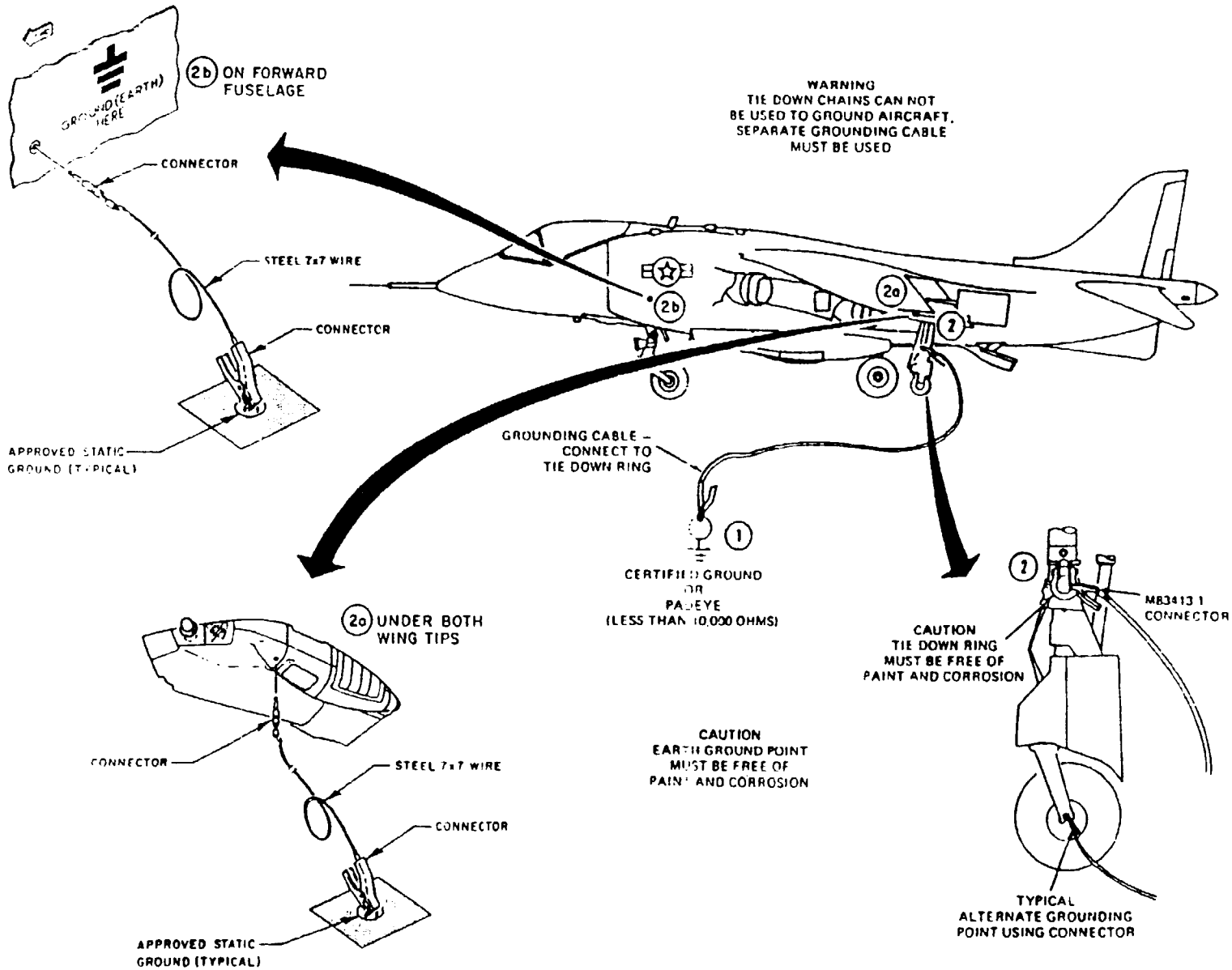

FIGURE 2-25. AV-8 aircraft grounding, parked evolution.

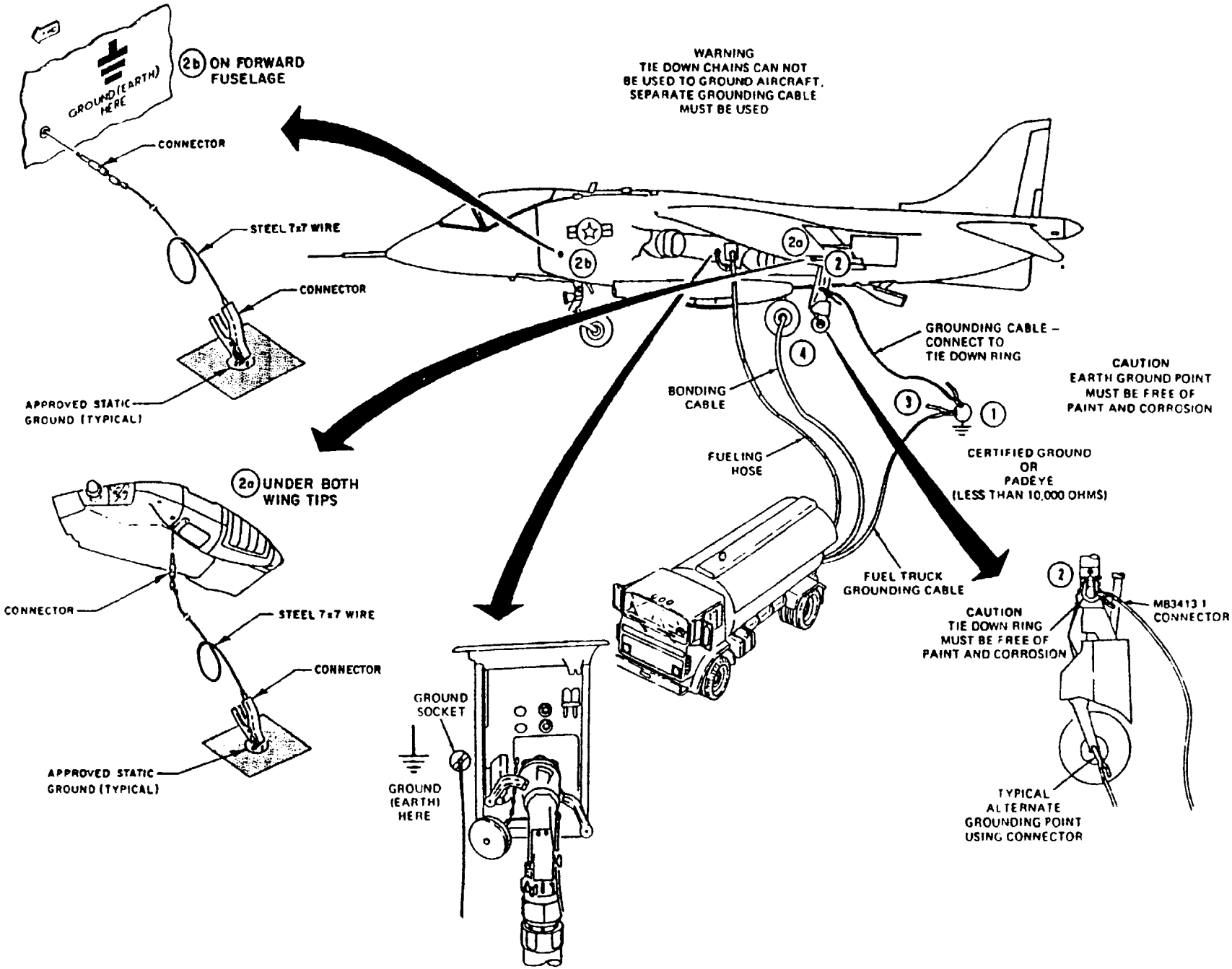

FIGURE 2-26. AV-8 aircraft grounding, fueling/defueling evolution.

b. Connect free end of grounding cable to outrigger gear tiedown ring (2). If this location is not accessible, then connect grounding cable to bottom part of outrigger gear leg (typical alternate grounding point) or to grounding point under main wing tips (2a) (as applicable) or grounding point on 0 forward fuselage (2b) (as applicable).
c. If using fuel truck, attach its grounding cable to a certified static ground or padeye (3).
d. Connect fuel truck bonding cable to main wheel axle (4).
e. When fueling/defueling evolution has been completed, wait a minimum of 2 min before removing bonding cable.
f. To remove grounding or bonding cable, reverse above procedures.

2.1.31 AV-8 hangar-based maintenance evolution. To ground AV-8 aircraft during maintenance evolution in the hangar, proceed as follows (see figure 2-27):

a. Attach grounding cable with M83413-1 electrical ground connector (clamp type) to a certified power ground (1).
b. Connect free end of grounding cable to outrigger gear tiedown ring (2). If this location is not accessible, then connect grounding cable to bottom part of outrigger gear leg (typical alternate grounding point) or to grounding point under main wing tips (2a) (as applicable) or grounding point on forward fuselage (2b) (as applicable).
c. To remove grounding cable, reverse above procedures.

2.1.32 AV-8 apron-based maintenance evolution (with MEPP plugged into aircraft). To ground AV-8 aircraft when in the maintenance evolution on the apron with MEPP plugged into aircraft, proceed as follows (see figure 2-28):

a. Attach grounding cable with M83413-1 electrical ground connector (clamp type) to a certified static ground or padeye (1).

NOTE: If the MEPP is an electrically-driven type, then a power ground must be used.

b. Connect free end of grounding cable to outrigger gear tiedown ring (2). If this location is not accessible, then connect grounding cable to bottom part of outrigger gear leg (typical alternate grounding point) or to grounding point under main wing tips (2a) (as applicable) or grounding point on forward fuselage (2b) (as applicable).
c. Attach bonding cable with M83413-1 electrical ground connector to main wheel axle (3).
d. Connect free end of bonding cable to a bare metal area on the MEPP (4).
e. To remove grounding or bonding cable, reverse the above procedures.

2.1.33 AV-8 apron-based maintenance evolution (using FLEDS). To ground AV-8 aircraft when in the maintenance evolution on the apron using FLEDS, proceed as follows (see figure 2-28):

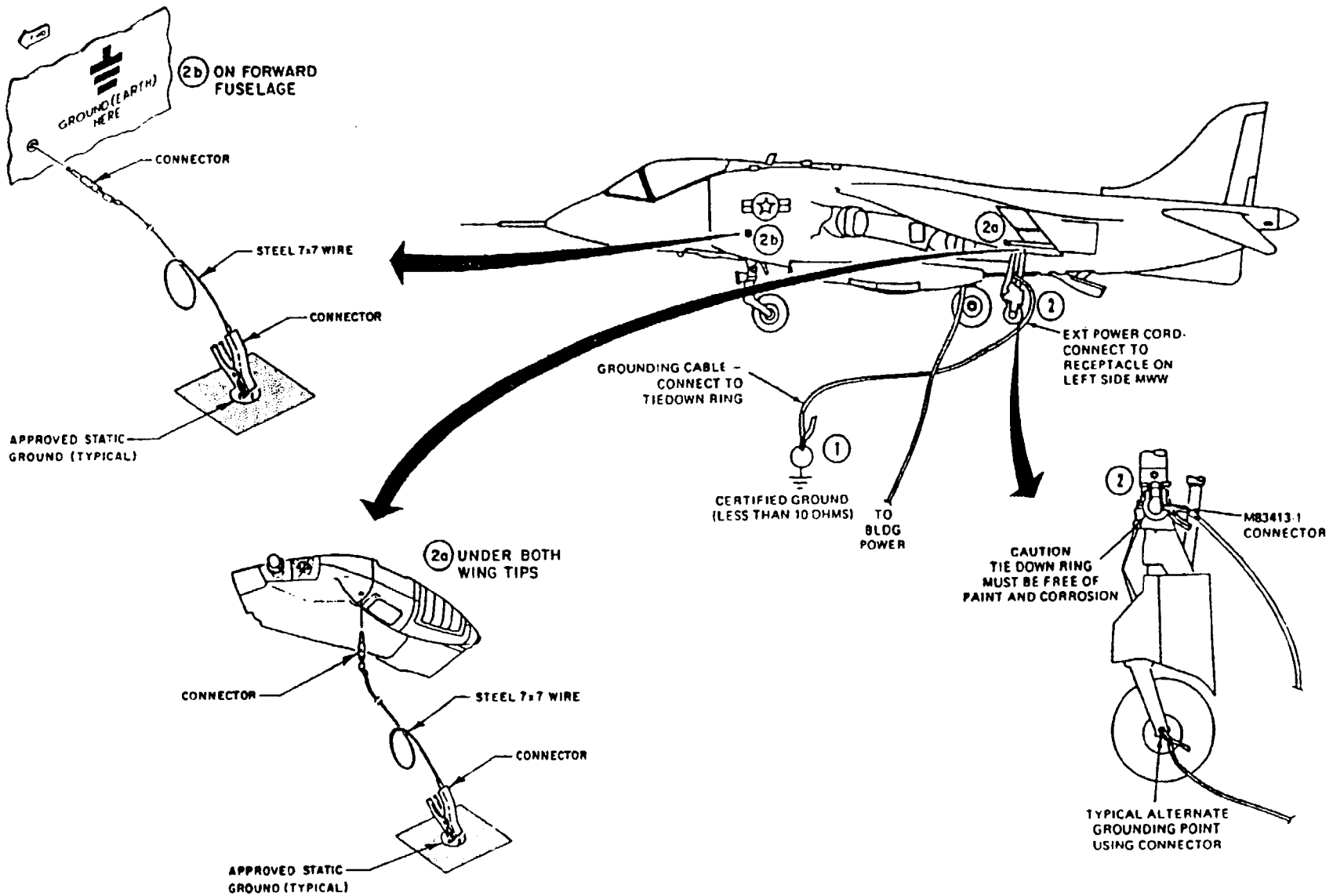

FIGURE 2-27. Hangar-based AV-8 aircraft grounding, maintenance evolution.

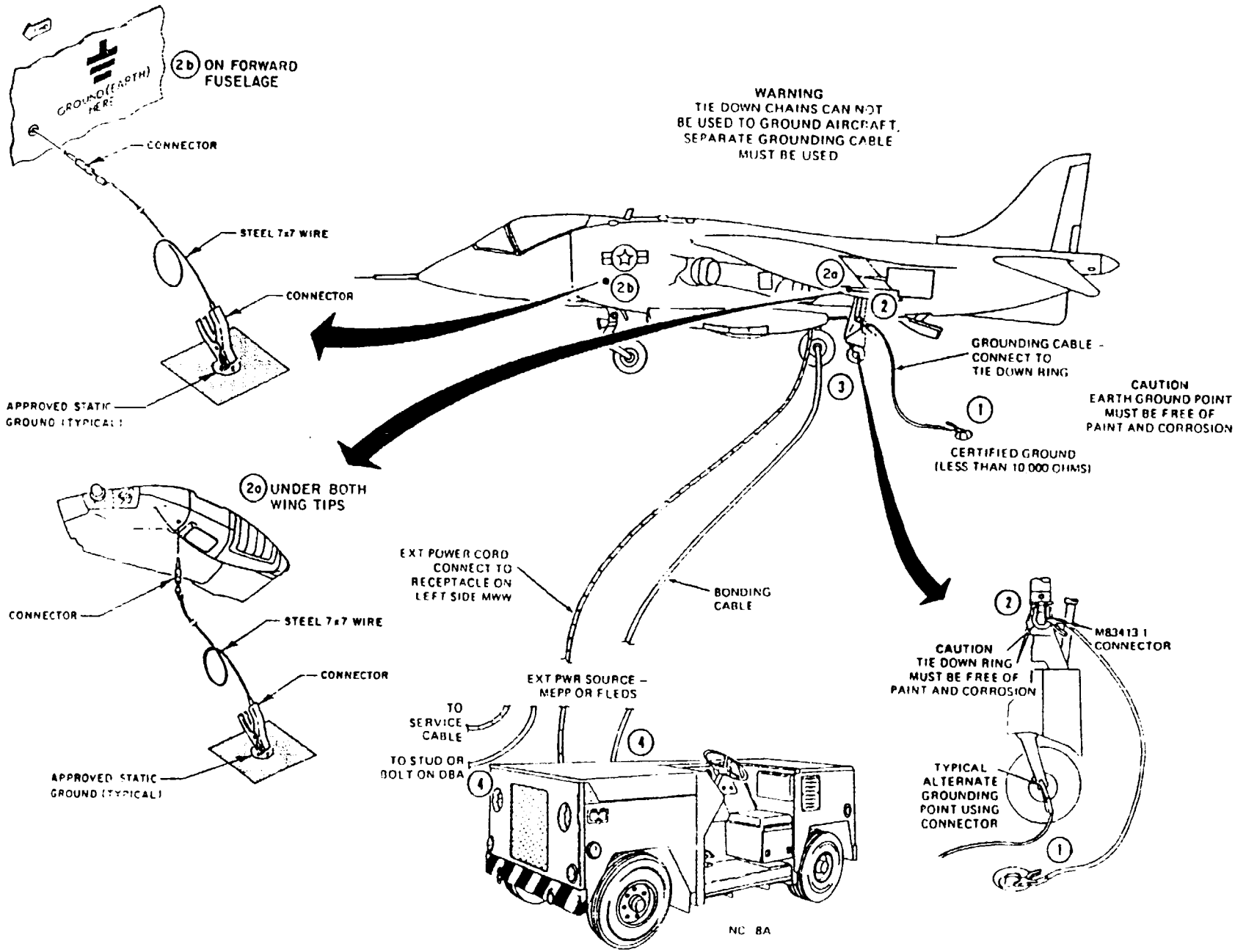

FIGURE 2-28. Apron-based AV-8 aircraft grounding, maintenance evolution.

a. Attach grounding cable with M83413-1 electrical ground connector (clamp type) to a certified static ground or padeye (1).
b. Connect free end of grounding cable to outrigger gear tiedown ring (2). If this location is not accessible, then connect grounding cable to bottom part of outrigger gear leg (typical alternate grounding point) or to grounding point under main wing tips (2a) (as applicable) or grounding point on forward fuselage (2b) (as applicable).
c. Attach bonding cable with M83413-1 electrical ground connector to main wheel axle (3).
d. Connect free end of bonding cable to a bare metal area on the DBA such as the stud or bolt (4) (see figure 2-155).
e. To remove grounding or bonding cable, reverse above procedures.

2.1.34 AV-8 stores loading/unloading evolution. To ground AV-8 aircraft during stores loading or unloading, proceed as follows (see figure 2-29):

a. Attach grounding cable with M83413-1 electrical ground connector (clamp type) to a certified static ground or padeye (1).
b. Connect free end of grounding cable to outrigger gear tiedown ring (2). If this location is not accessible, then connect grounding cable to bottom part of outrigger gear leg (typical alternate grounding point) or to grounding point under main wing tips (2a) (as applicable) or grounding point on forward fuselage (2b) (as applicable).
c. To remove grounding cable, reverse above procedures.

2.1.35 C-1 parked evolution. To ground C-1 aircraft when in the parked evolution, proceed as follows (see figure 2-30):

a. Attach grounding cable with M83413-1 electrical ground connector (clamp type) to a certified static ground or padeye (1).
b. Connect free end of grounding cable to nose gear towing ring (2). If this location is not accessible, then connect grounding cable to main gear tiedown ring (typical alternate grounding point).
c. To remove grounding cable, reverse above procedures.

2.1.36 C-1 Fueling/defueling evolution. To ground C-1 aircraft when fueling or defueling, proceed as follows (see figure 2-31):

a. Attach grounding cable with M83413-1 electrical ground connector (clamp type) to a certified static ground or padeye (1).
b. Connect free end of ground cable to nose gear towing ring (2). If this location is not accessible, then connect grounding cable to main gear tiedown ring (typical alternate grounding point).
c. If using fuel truck, attach its grounding cable to a certified static ground or padeye (3).
d. Connect fuel truck bonding cable to nose gear towing ring (4).
e. When fueling/defueling evolution has been completed, wait a minimum of 2 min before removing bonding cable.
f. To remove grounding or bonding cable, reverse above procedures.

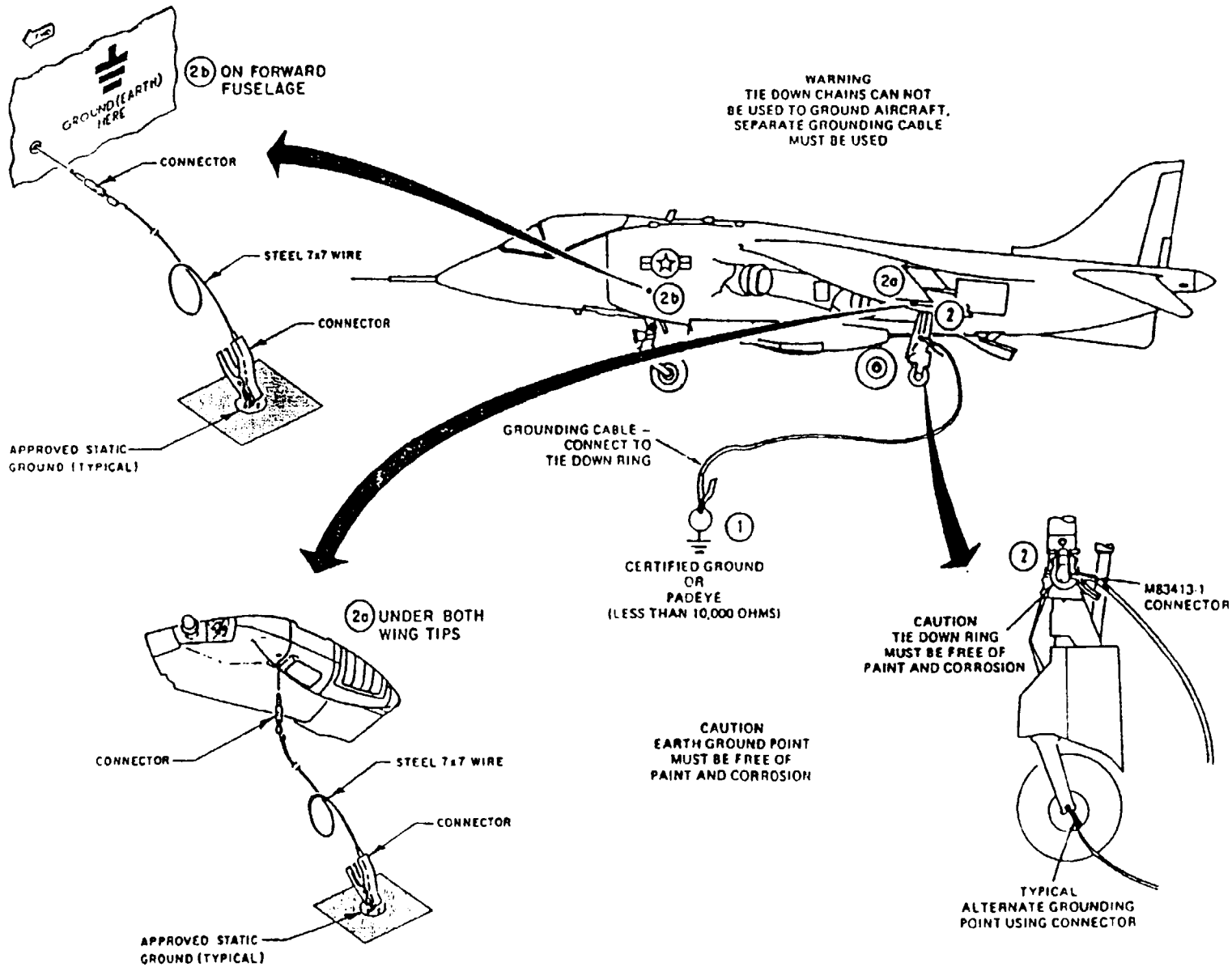

FIGURE 2-29. AV-8 aircraft grounding, stores loading/unloading evolution.

2.1.37 C-1 hangar-based maintenance evolution. To ground C-1 aircraft during maintenance evolution in the hangar, proceed as follows (see figure 2-32):

a. Attach grounding cable with M83413-1 electrical ground connector (clamp type) to a certified power ground (1).
b. Connect free end of grounding cable to nose gear towing ring (2). If this location is not accessible, then connect grounding cable to main gear tiedown ring (typical alternate grounding point).
c. To remove grounding cable, reverse above procedures.

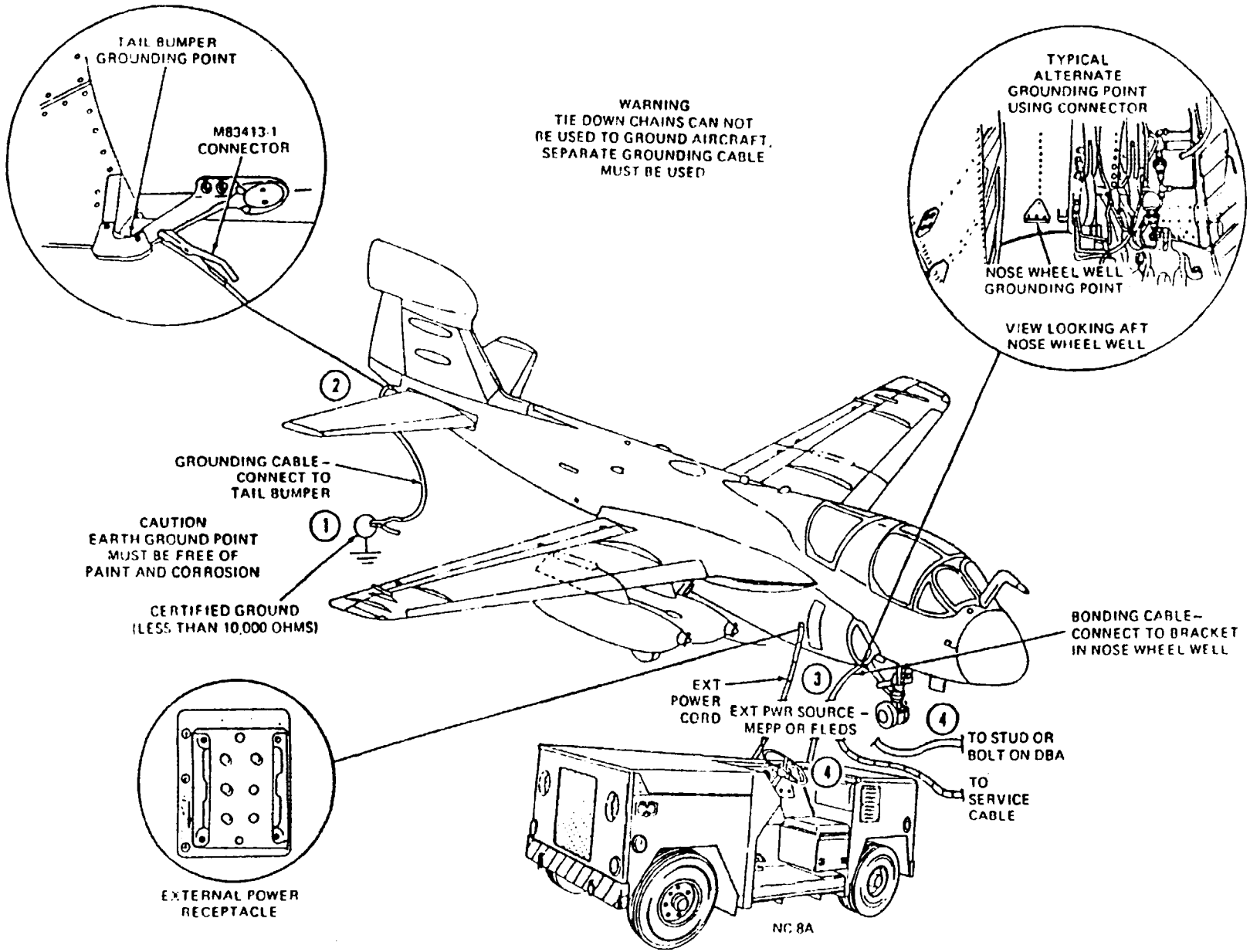

FIGURE 2-50. Apron-based EA-6 aircraft grounding, maintenance evolution.

c. Attach bonding cable with M83413-1 electrical ground connector to bracket inside nose wheel well (3).
d. Connect free end of bonding cable to a bare metal area on the MEPP (4).
e. To remove grounding or bonding cable, reverse above procedures.

2.1.59 EA-6 apron-based maintenance evolution (using FLEDS). To ground EA-6 aircraft when in the maintenance evolution on the apron using FLEDS, proceed as follows (see figure 2-50):

a. Attach grounding cable with M83413-1 electrical ground connector (clamp type) to a certified static ground or padeye (1).
b. Connect free end of grounding cable to tail bumper (2). If this location is not accessible, then connect grounding cable to bracket inside nose wheel well (typical alternate grounding point).
c. Attach bonding cable with M83413-1 electrical ground connector to bracket inside nose wheel well (3).
d. Connect free end of bonding cable to a bare metal area on the DBA such as the stud or bolt (4) (see figure 2-155).
e. To remove grounding or bonding cable, reverse above procedures.

2.1.60 EA-6 stores loading/unloading evolution. To ground EA-6 aircraft during stores loading or unloading, proceed as follows (see figure 2-51):

a. Attach grounding cable with M83413-1 electrical ground connector (clamp type) to a certified static ground or padeye (1).
b. Connect free end of grounding cable to tail bumper (2). If this location is not accessible, then connect grounding cable to bracket inside nose wheel well (typical alternate grounding point).
c. To remove grounding cable, reverse above procedures.

2.1.61 F-4 parked evolution. To ground F-4 aircraft when in the parked evolution, proceed as follows (see figure 2-52):

a. Attach grounding cable with M83413-1 electrical ground connector (clamp type) to a certified static ground or padeye (1).
b. Connect free end of grounding cable to engine nacelle grounding receptacle (typical) (2) or to grounding receptacles on main wings (2a) (as applicable).
c. If grounding receptacles are not accessible, then using a grounding cable with M83413-1 electrical ground connector at each end, follow step a, and connect free end of grounding cable to main gear tiedown ring (typical alternate grounding point).
d. To remove grounding cable, reverse above procedures.

2.1.62 F-4 fueling/defueling evolution. To ground F-4 aircraft when fueling or defueling, proceed as follows (see figure 2-53):

a. Attach grounding cable with M83413-1 electrical ground connector (clamp type) to a certified static ground or padeye (1).

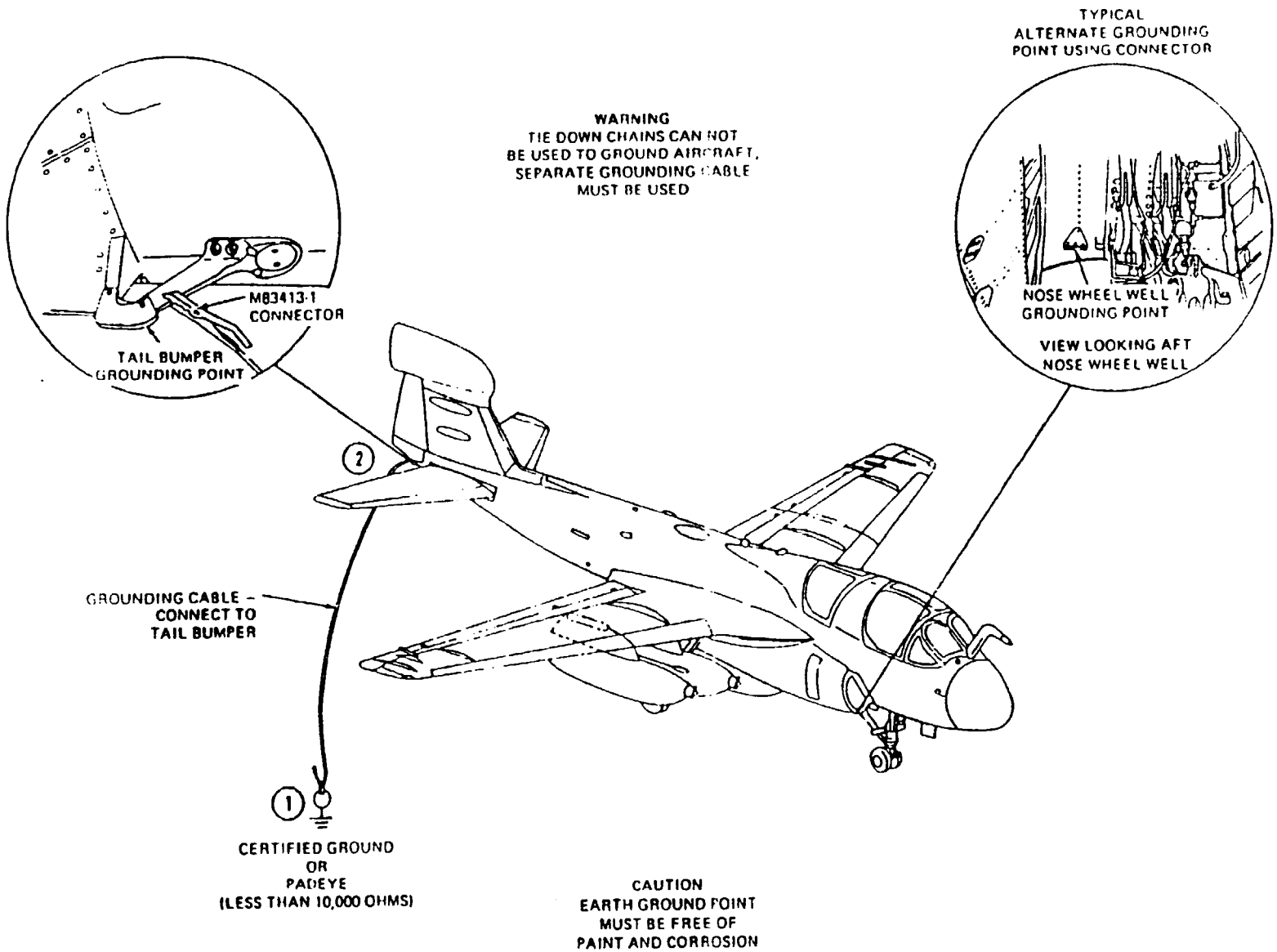

FIGURE 2-51. EA-6 aircraft grounding, stores loading/unloading evolution.

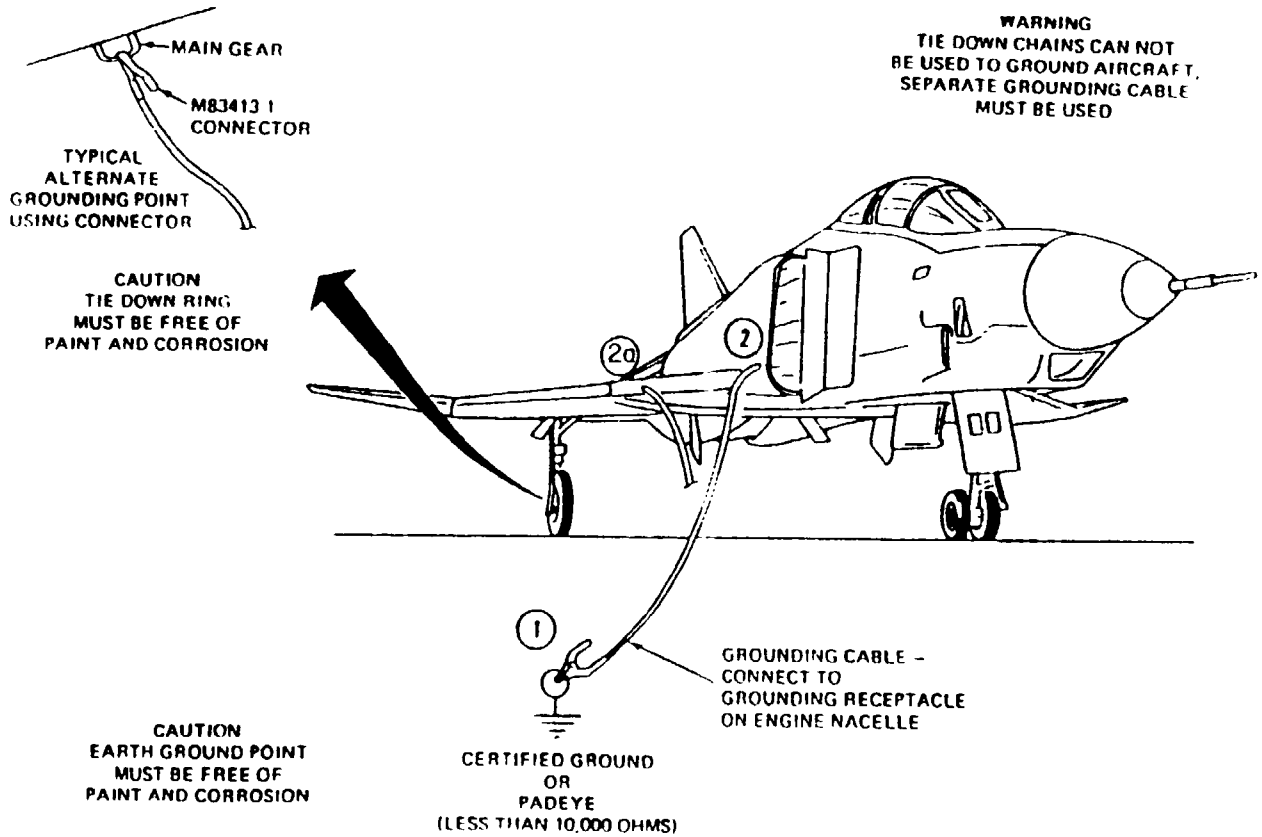

FIGURE 2-52. F-4 aircraft grounding, parked evolution.

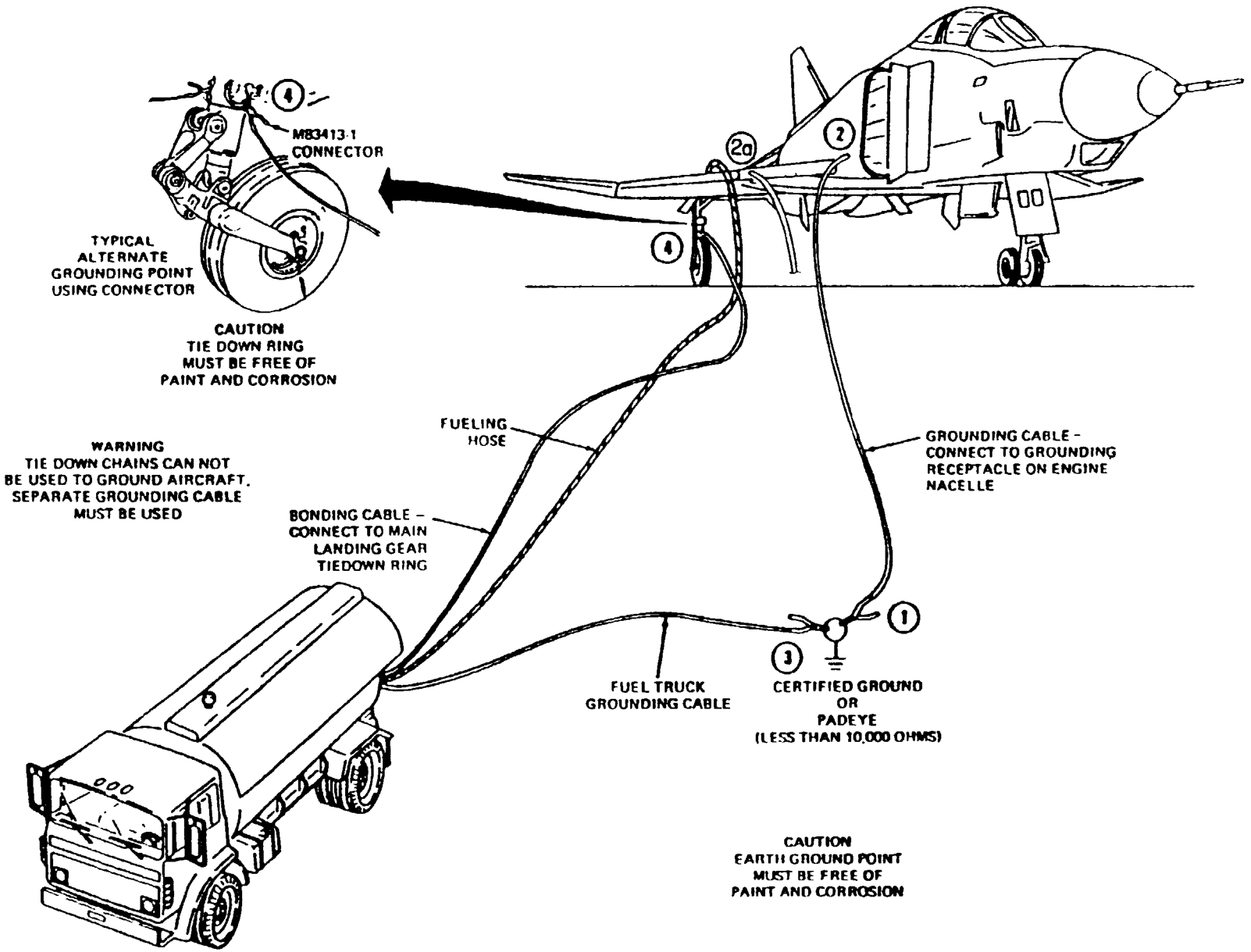

FIGURE 2-53. F-4 aircraft grounding, fueling/defueling evolution.

b. Connect free end of grounding cable to engine nacelle grounding receptacle (typical) (2) or to grounding receptacles on main wings (2a) (as applicable).
c. If grounding receptacles are not accessible, then using a grounding cable with M83413-1 electrical ground connector at each end, follow step a, and connect free end of grounding cable to main gear tiedown ring (typical alternate grounding point).
d. If using fuel truck, attach its grounding cable to a certified static ground or padeye (3).
e. Connect fuel truck bonding cable to main gear tiedown ring (4).
f. When fueling/defueling evolution has been completed, wait a minimum of 2 min before removing bonding cable.
g. To remove grounding or bonding cable, reverse above procedures.

2.1.63 F-4 hanger-based maintenance evolution. To ground F-4 aircraft during maintenance in the hangar, proceed as follows (see figure 2-54):

a. Attach grounding cable with M83413-1 electrical ground connector (clamp type) to a certified power ground (1).
b. Connect free end of grounding cable to engine nacelle grounding receptacle (typical) (2) or to grounding receptacles on main wings (2a) (as applicable).
c. If grounding receptacles are not accessible, then using a grounding cable with M83413-1 electrical ground connector at each end, follow step a, and connect free end of grounding cable to main gear tiedown ring (typical alternate grounding point).
d. To remove grounding cable, reverse above procedures.

2.1.64 F-4 apron-based maintenance evolution (with MEPP plugged into aircraft). To ground F-4 aircraft when in the maintenance evolution on the apron with MEPP plugged into aircraft, proceed as follows (see figure 2-55):

a. Attach grounding cable with M83413-1 electrical ground connector (clamp type) to a certified static ground or padeye (1).

NOTE: If the MEPP is an electrically-driven type, then a power ground must be used.

b. Connect free end of grounding cable to engine nacelle grounding receptacle (typical) (2) or to grounding receptacles on main wings (2a) (as applicable).
c. If grounding receptacles are not accessible, then using a grounding cable with M83413-1 electrical ground connector at each end, follow step a, and connect free end of grounding cable to main gear tiedown ring (typical alternate grounding point).
d. Attach bonding cable with M83413-1 electrical ground connector to main gear tiedown ring (3).
e. Connect free end of bonding cable to a bare metal area on the MEPP (4).
f. To remove grounding or bonding cable, reverse above procedures.

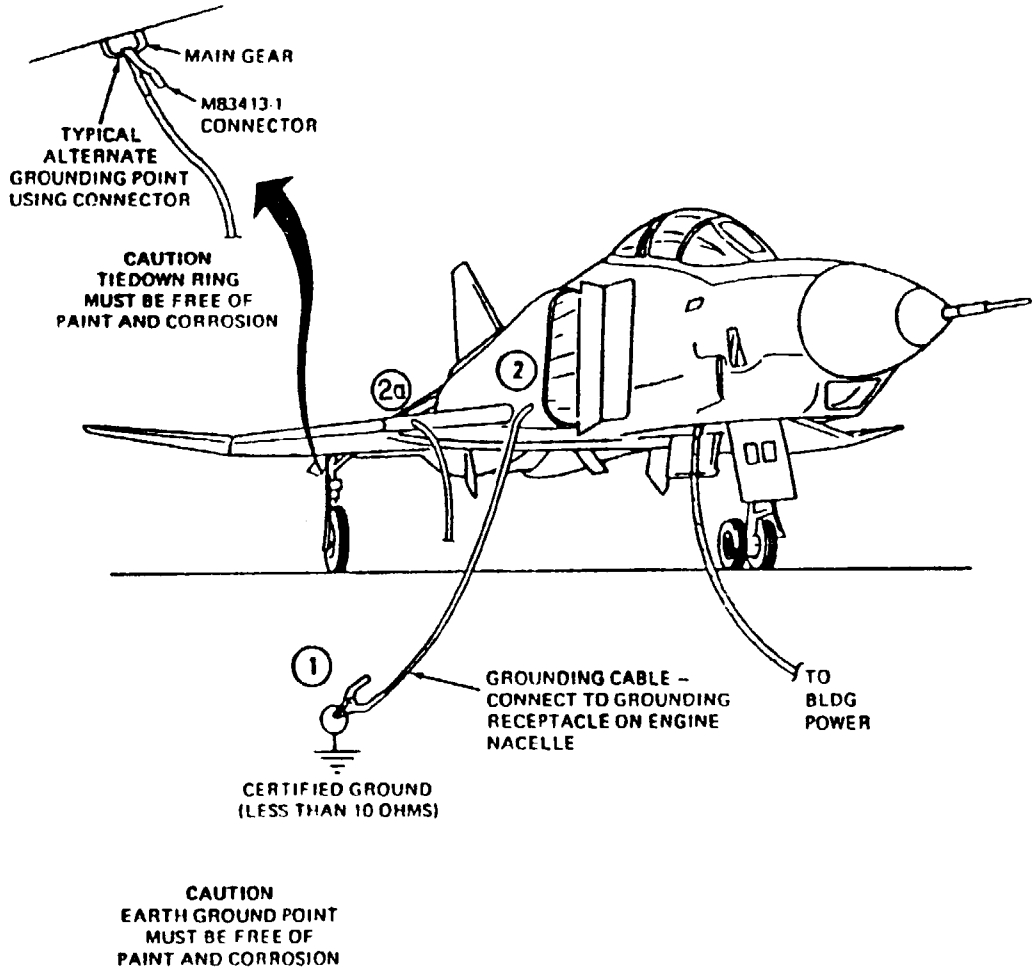

FIGURE 2-54. Hangar-based F-4 aircraft grounding, maintenance evolution.

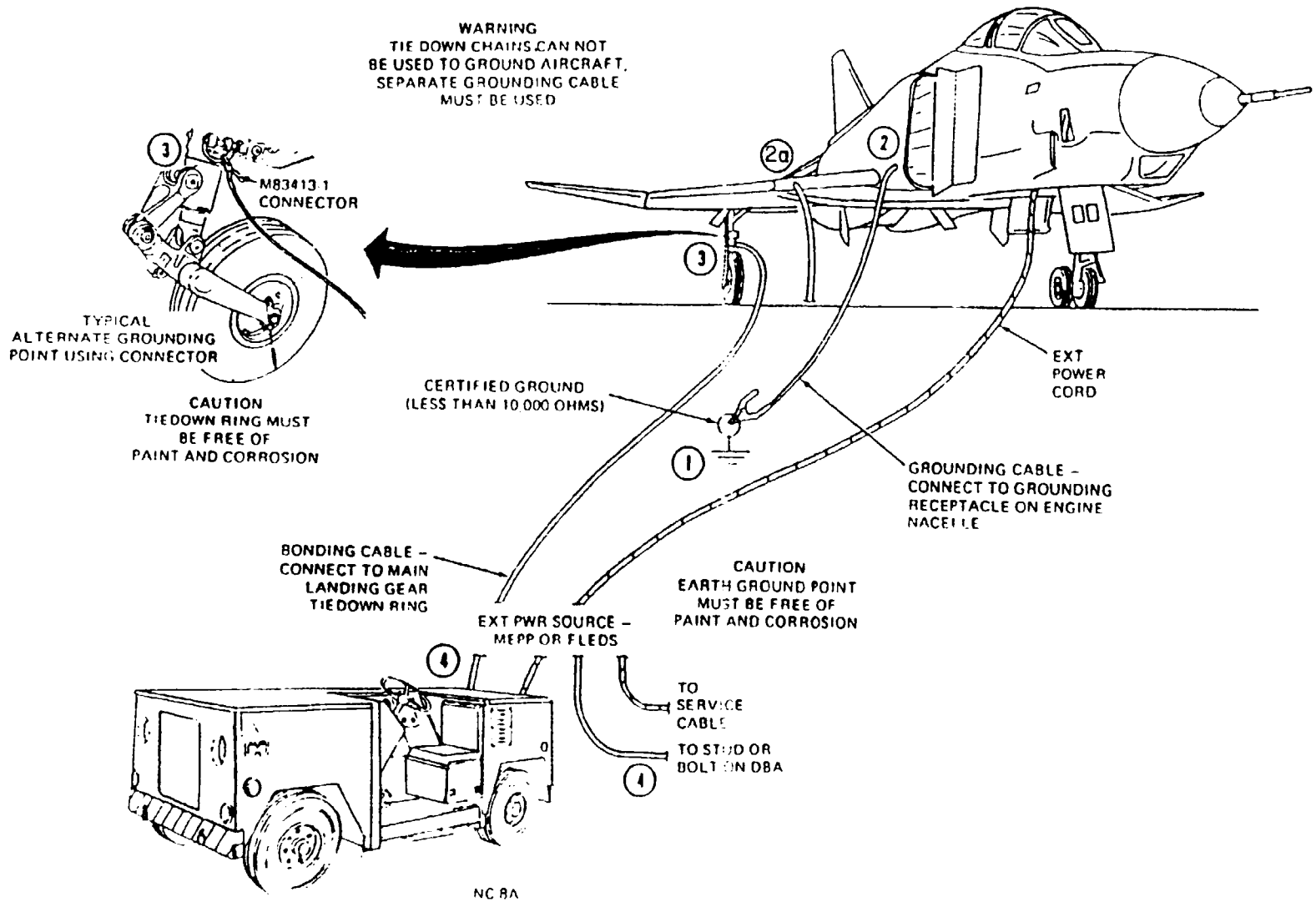

FIGURE 2-55. Apron-based F-4 aircraft grounding, maintenance evolution.

2.1.65 F-4 apron-based maintenance evolution (using FLEDS). To ground F-4 aircraft when in the maintenance evolution on the apron using FLEDS, proceed as follows (see figure 2-55):

a. Attach grounding cable with M83413-1 electrical ground connector (clamp type) to a certified static ground or padeye (1).
b. Connect free end of grounding cable to engine nacelle grounding receptacle (typical) (2) or to grounding receptacles on main wings (2a) (as applicable).
c. If grounding receptacles are not accessible, then using a grounding cable with M83413-1 electrical ground connector at each end, follow step a, and connect free end of grounding cable to main gear tiedown ring (typical alternate grounding point).
d. Attach bonding cable with M83413-1 electrical ground connector to main gear tiedown ring (3).
e. Connect free end of bonding cable to a bare metal area on the DBA such as the stud or bolt (4) (see figure 2-155).
f. To remove grounding or bonding cable, reverse above procedures.

2.1.66 F-4 stores loading/unloading evolution. To ground F-4 aircraft during stores loading or unloading, proceed as follows (see figure 2-56):

a. Attach grounding cable with M83413-1 electrical ground connector (clamp type) to a certified static ground or padeye (1).
b. Connect free end of grounding cable to engine nacelle grounding receptacle (typical) (2) or to grounding receptacles on main wings (2a) (as applicable).
c. If grounding receptacles are not accessible, then using a grounding cable with M83413-1 electrical ground connector at each end, follow step a, and connect free end of grounding cable to main gear tiedown ring (typical alternate grounding point).
d. To remove grounding cable, reverse above procedures.

2.1.67 F-14 parked evolution. To ground F-14 aircraft when in the parked evolution, proceed as follows (see figure 2-57):

a. Attach grounding cable with M83413-1 electrical ground connector (clamp type) to a certified static ground or padeye (1).
b. Connect free end of grounding cable to lower torque arm pin on nose gear (2). If this location is not accessible, then connect grounding cable to nose gear tiedown ring (typical alternate grounding point).
c. To remove grounding cable, reverse above procedures.

2.1.68 F-14 fueling/defueling evolution. To ground F-14 aircraft when fueling or defueling, proceed as follows (see figure 2-58):

a. Attach grounding cable with M83413-1 electrical ground connector (clamp type) to a certified static ground or padeye (1).
b. Connect free end of grounding cable to lower torque arm pin on nose gear (2). If this location is not accessible, then connect grounding cable to nose gear tiedown ring (typical alternate grounding point).

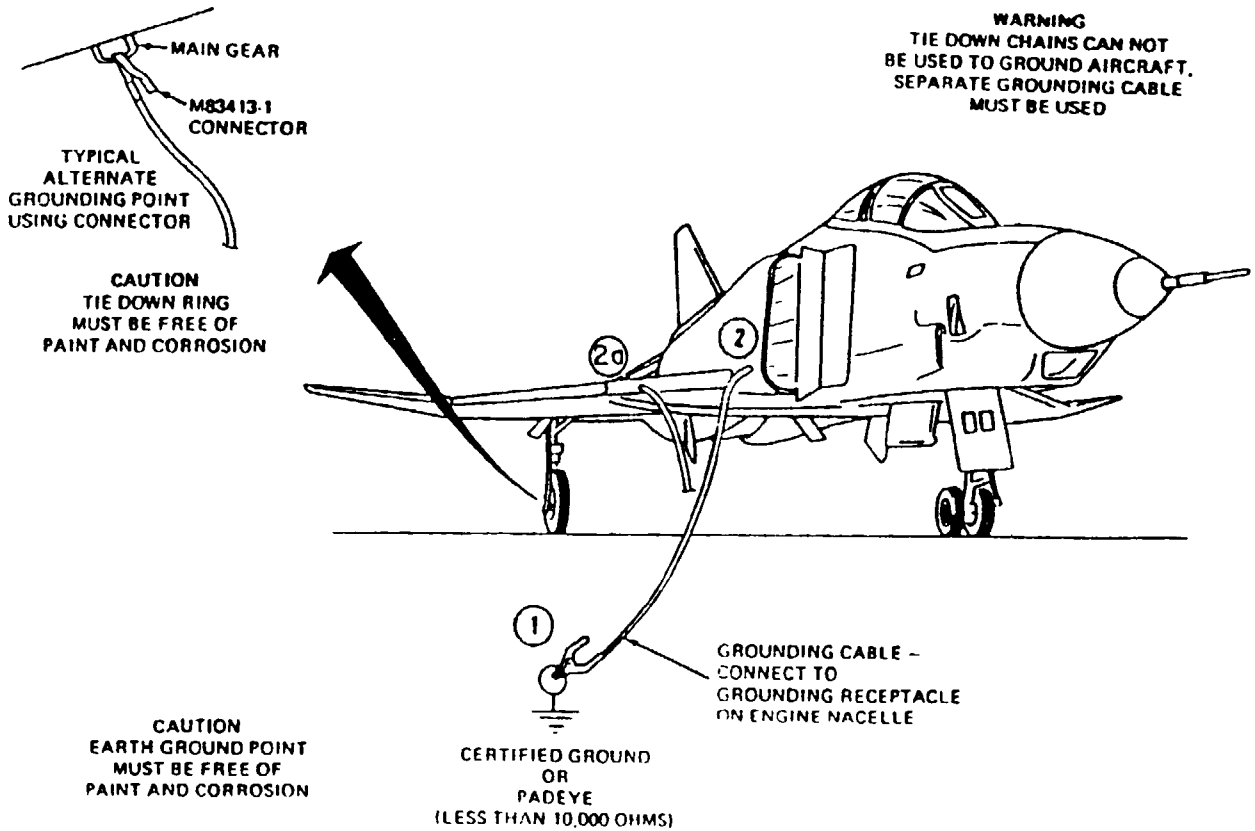

FIGURE 2-56. F-4 aircraft grounding, stores loading/unloading evolution.

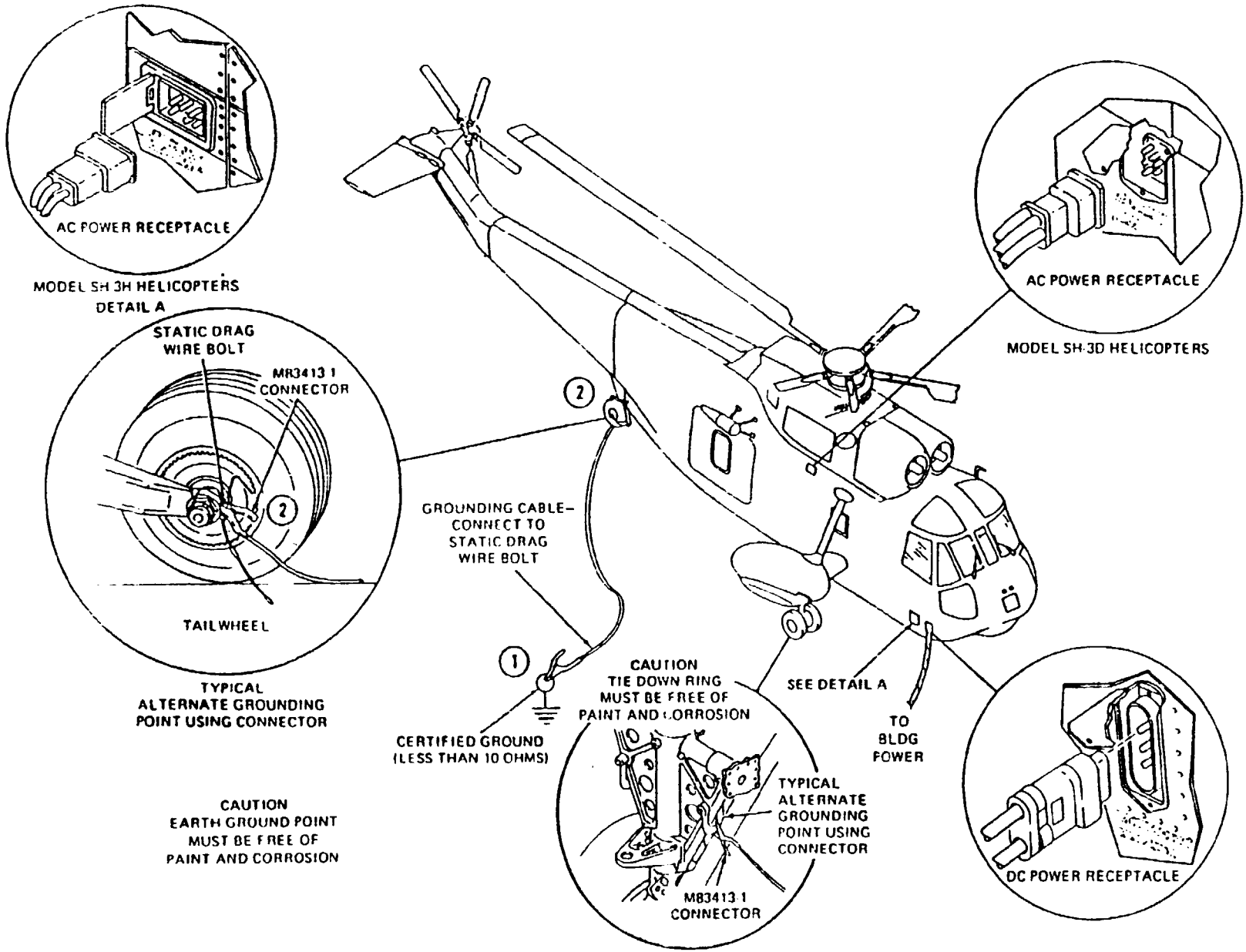

FIGURE 2-94. Hangar-based SH-3 aircraft grounding, maintenance evolution.

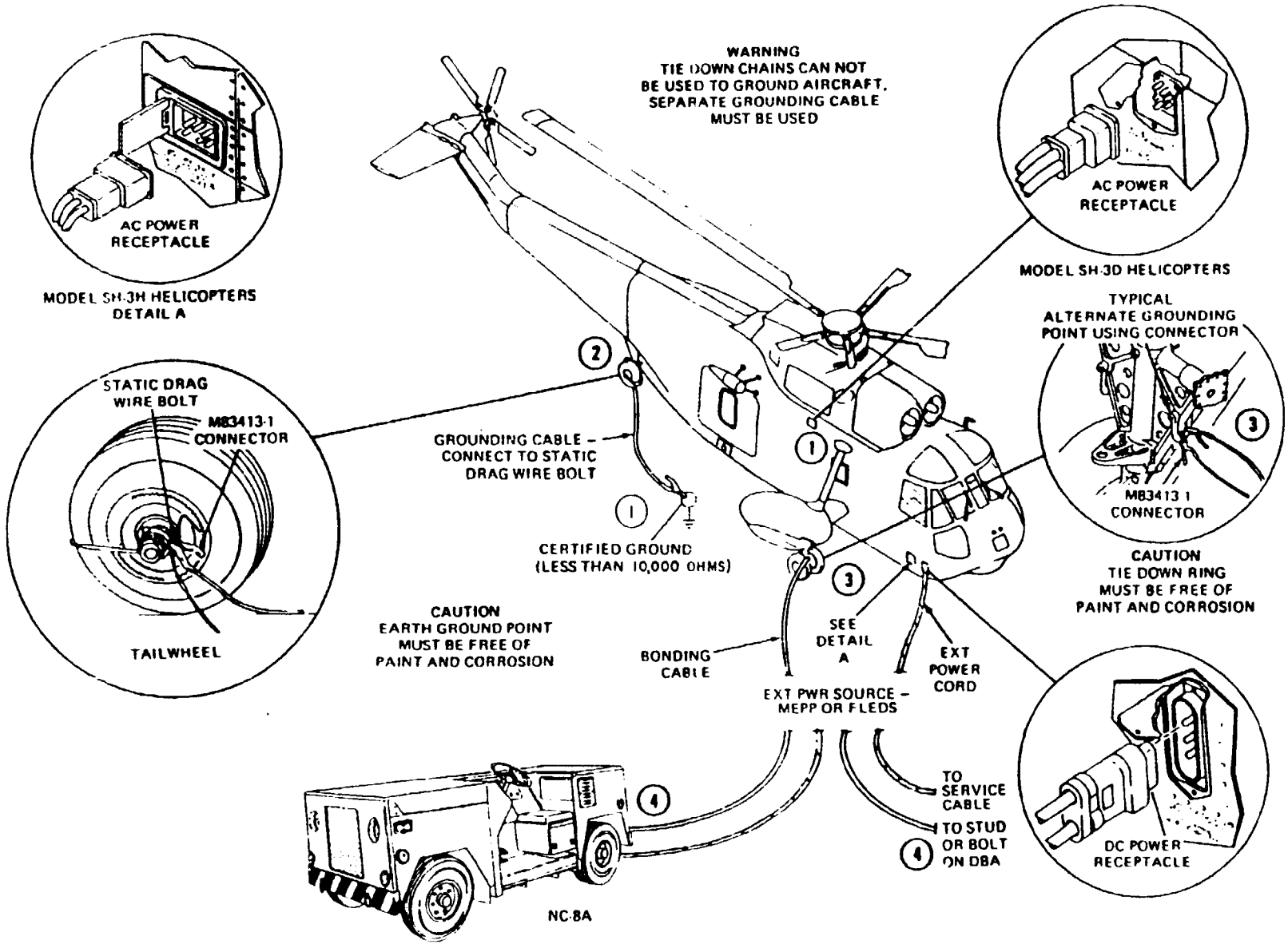
WARNING
TIE DOWN CHAINS CAN NOT BE USED TO GROUND AIRCRAFT. SEPARATE GROUNDING CABLE MUST BE USED
AC POWER RECEPTACLE
MODEL SH-3H HELICOPTERS DETAIL A
AC POWER RECEPTACLE
MODEL SH-3D HELICOPTERS
TYPICAL ALTERNATE GROUNDING POINT USING CONNECTOR
M83413-1 CONNECTOR
CAUTION
TIE DOWN RING MUST BE FREE OF PAINT AND CORROSION
STATIC DRAG WIRE BOLT
M83413-1 CONNECTOR
TAILWHEEL
GROUNDING CABLE - CONNECT TO STATIC DRAG WIRE BOLT
CERTIFIED GROUND (LESS THAN 10,000 OHMS)
CAUTION
EARTH GROUND POINT MUST BE FREE OF PAINT AND CORROSION
BONDING CABLE
SEE DETAIL A
EXT POWER CORD
EXT PWR SOURCE - MEPP OR FLEDS
TO SERVICE CABLE
TO STUD OR BOLT ON DBA
DC POWER RECEPTACLE
NC-8A

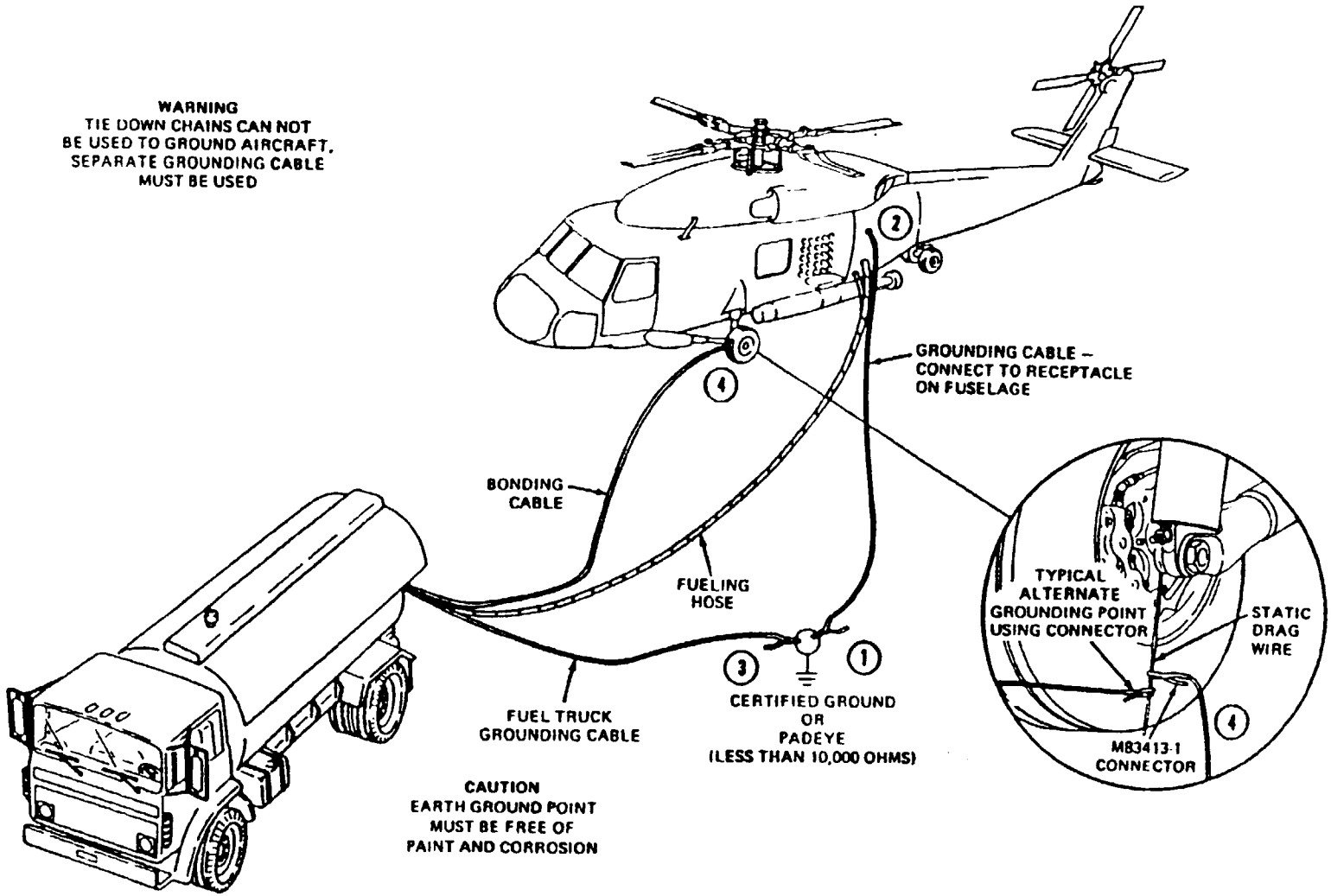

FIGURE 2-98. SH-60 aircraft grounding, fueling/defueling evolution.

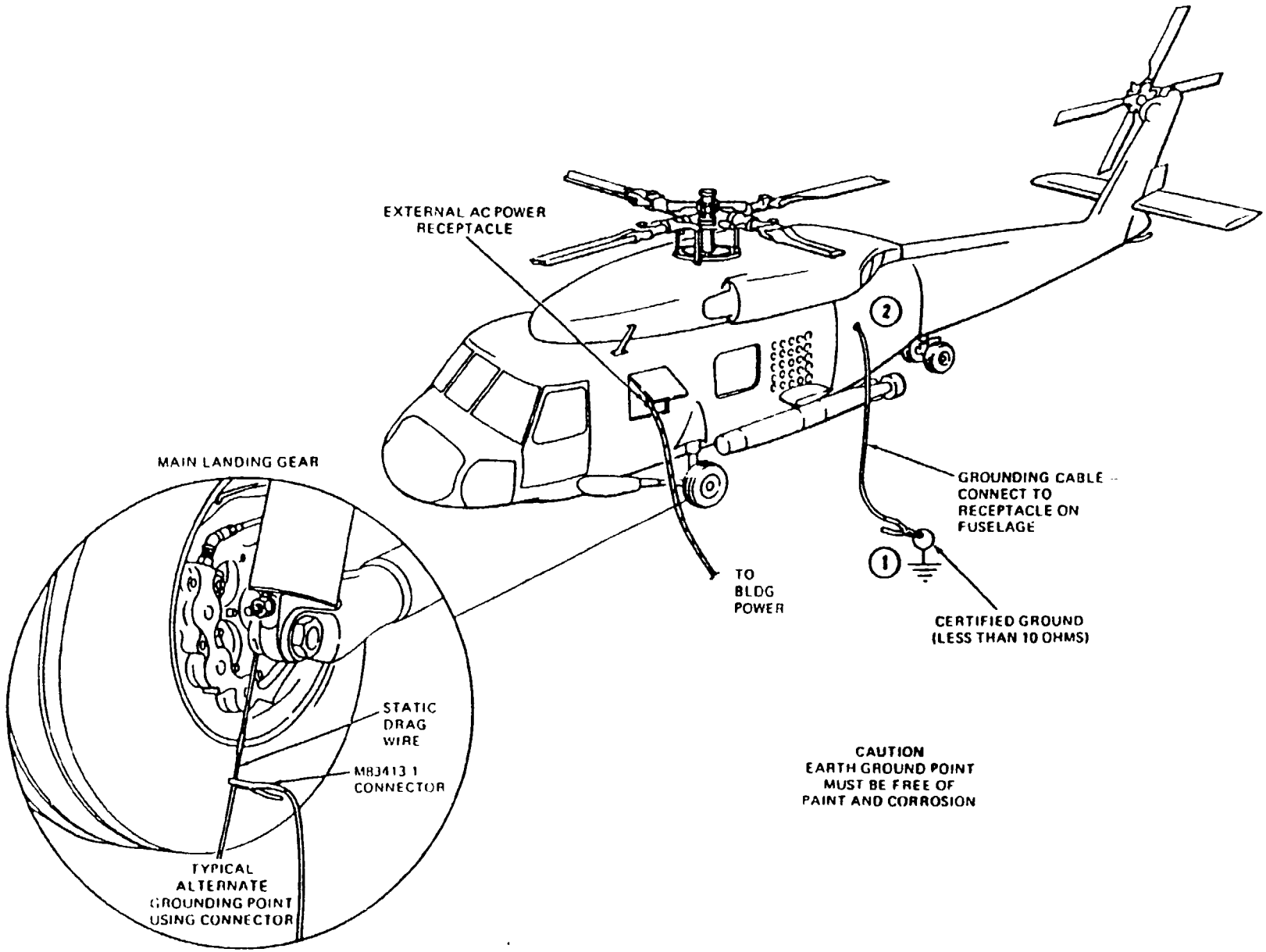

FIGURE 2-99. Hangar-based SH-60 aircraft grounding, maintenance evolution.

b. Connect free end of grounding cable to nose wheel axle (2). If this location is not accessible, then connect grounding cable to main wheel axle (typical alternate grounding point).
c. If using fuel truck, attach its grounding cable to a certified static ground or padeye (3).
d. Connect fuel truck bonding cable to main wheel axle (4).
e. When fueling/defueling evolution has been completed, wait a minimum of 2 min before removing bonding cable.
f. To remove grounding or bonding cable, reverse above procedures.

2.1.126 UC-12 hangar-based maintenance evolution. To ground UC-12 aircraft during maintenance evolution in the hangar, proceed as follows (see figure 2-108):

a. Attach grounding cable with M83413-1 electrical ground connector (clamp type) to a certified power ground (1).
b. Connect free end of grounding cable to nose wheel axle (2). If this location is not accessible, then connect grounding cable to main wheel axle (typical alternate grounding point).
c. To remove grounding cable, reverse above procedures.

2.1.127 UC-12 apron-based maintenance evolution (with MEPP plugged into aircraft). To ground UC-12 aircraft when in the maintenance evolution on the apron with MEPP plugged into aircraft, proceed as follows (see figure 2-109):

a. Attach grounding cable with M83413-1 electrical ground connector (clamp type) to a certified static ground or padeye (1).

NOTE: If the MEPP is an electrically-driven type, then a power ground must be used.

b. Connect free end of grounding cable to nose wheel axle (2). If this location is not accessible, then connect grounding cable to main wheel axle (typical alternate grounding point).

NOTE: If the MEPP is a diesel engine-driven type, then the following bonding requirement is waived.

c. Attach bonding cable with M83413-1 electrical ground connector to main wheel axle (3).
d. Connect free end of bonding cable to a bare metal area on the MEPP (4).
e. To remove grounding or bonding cable, reverse above procedures.

2.2 Carrier-based aircraft. The following paragraphs provide step-by-step procedures for grounding carrier-based aircraft. Note that the word "carrier" is meant to refer to any ship which supports aircraft flight operations. The airframe electrical grounding procedures presented in the handbook are valid for aircraft operations on all ships.

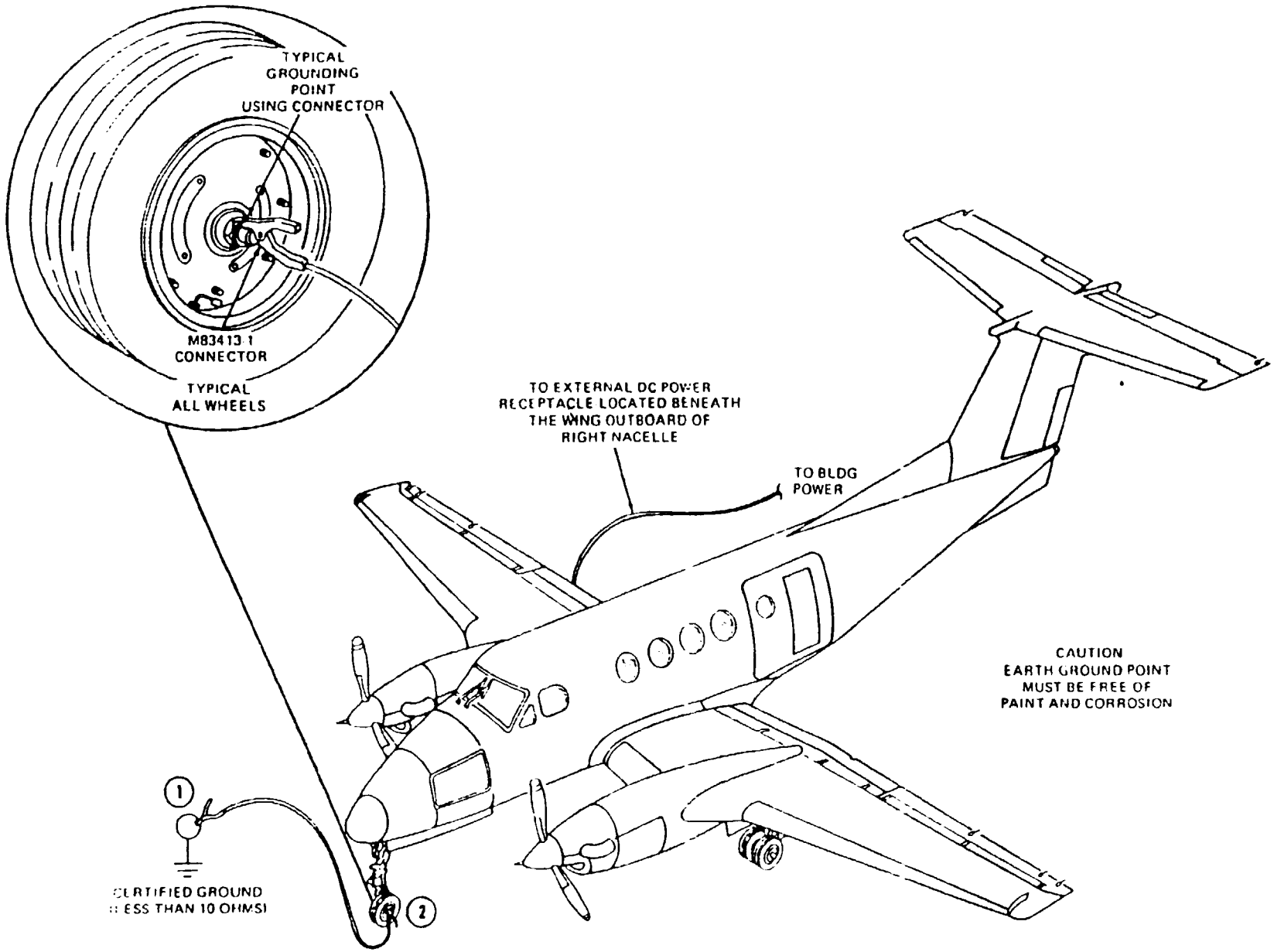

FIGURE 2-108. Hangar-based UC-12 aircraft grounding, maintenance evolution.

NOTE: COMNAVAIRPAC/COMNAVAIRLANTINST 3100.4A REQUIRES SINGLE POINT PRESSURE FUELING ONLY ON CV/CVN CLASS SHIPS. ALL REFERENCES TO "GRAVITY FUELING" IN THE ILLUSTRATIONS THAT FOLLOW DO NOT APPLY TO CV/CVN VESSELS.

Before attaching grounding cables, ensure that the aircraft has been tied down and secured to the carrier deck. Tiedown chains cannot be relied upon for grounding. A grounding cable must be used to properly implement the grounding methods presented in this section.

Maintenance evolutions and fueling evolutions are represented for each aircraft type while the parked and stores loading/unloading evolutions are illustrated for

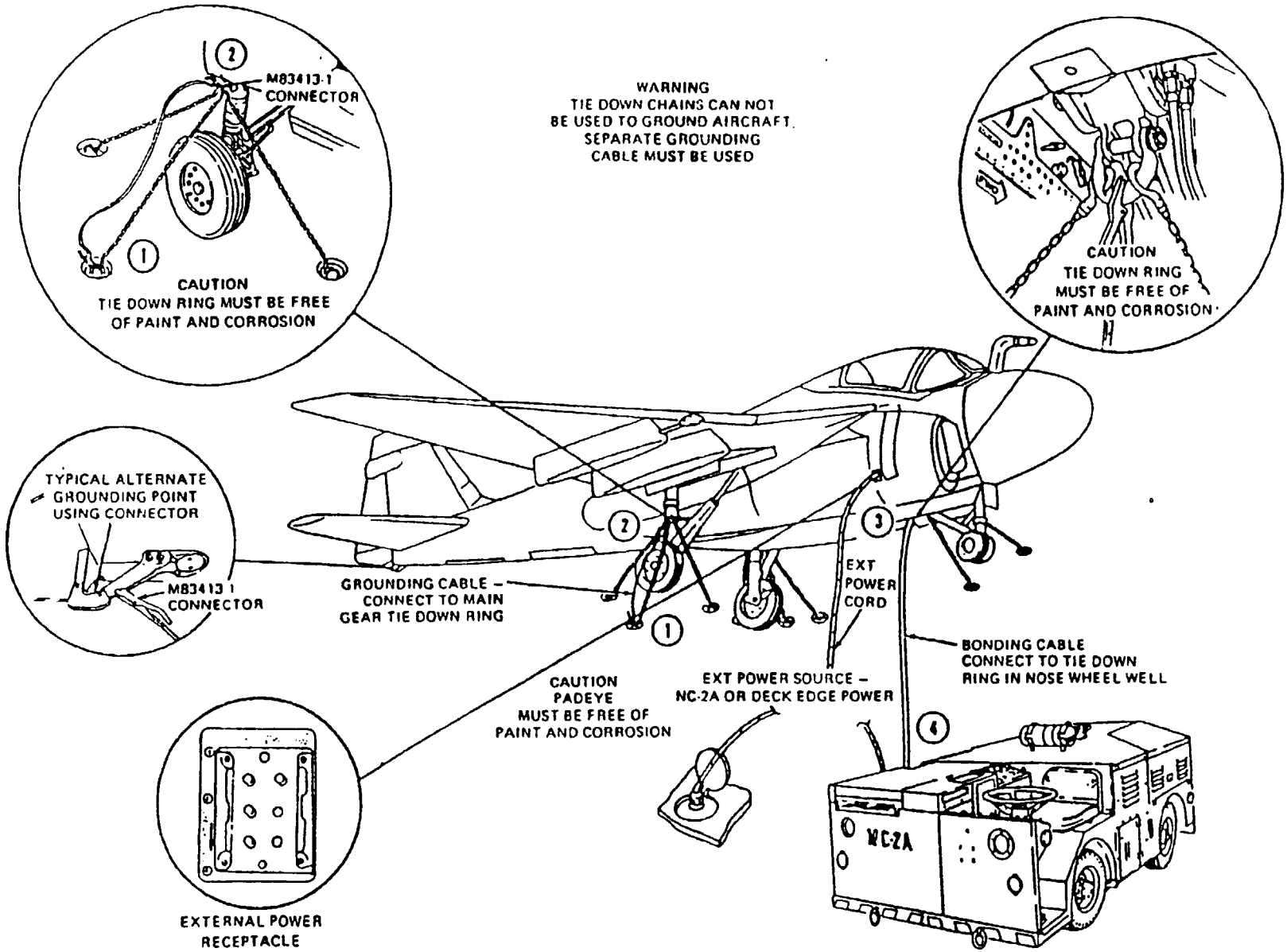

FIGURE 2-115. Carrier-based A-6 aircraft, maintenance evolution.

aircraft when in the parked evolution and stores loading/unloading evolution, proceed as follows (see figure 2-116):

a. Attach grounding cable with M83413-1 electrical ground connector (clamp type) to a padeye (1).
b. Connect free end of grounding cable to pylon station grounding receptacle (typical) (2).
c. If grounding receptacles are not accessible, then using a grounding cable with M83413-1 electrical ground connector at each end, follow step a, and connect free end of grounding cable to nose gear tiedown ring (typical alternate grounding point).
d. To remove grounding cable, reverse above procedures.

2.2.8 Carrier-based A-7 fueling/defueling evolution. To ground carrier-based A-7 aircraft when fueling or defueling, proceed as follows (see figure 2-117):

a. Attach grounding cable with M83413-1 electrical ground connector (clamp type) to a padeye (1).
b. Connect free end of grounding cable to grounding receptacle in left-hand wheelwell (2).
c. If grounding receptacles are not accessible, then using a grounding cable with M83413-1 electrical ground connector at each end, follow step a, and connect free end of grounding cable to nose gear tiedown ring (typical alternate grounding point).
d. If using MEPP, attach bonding cable with M83413-1 electrical ground connector to nose gear tiedown ring (3).
e. Connect free end of bonding cable to a bare metal area on the MEPP (4).
f. To remove grounding or bonding cable, reverse above procedures.

2.2.9 Carrier-based A-7 maintenance evolution. To ground carrier-based A-7 aircraft when in the maintenance evolution, proceed as follows (see figure 2-118):

a. Attach grounding cable with M83413-1 electrical ground connector (clamp type) to a padeye (1).
b. Connect free end of grounding cable to grounding receptacle in left-hand wheelwell (2).
c. If grounding receptacles are not accessible, then using a grounding cable with M83413-1 electrical ground connector at each end, follow step a, and connect free end of grounding cable to nose gear tiedown ring (typical alternate grounding point).
d. If using MEPP, attach bonding cable with M83413-1 electrical ground connector to nose gear tiedown ring (3).
e. Connect free end of bonding cable to a bare metal area on the MEPP (4).
f. To remove grounding or bonding cable, reverse above procedures.

2.2.10 Carrier-based AH-1 fueling/defueling evolution. To ground carrier-based AH-1 aircraft when fueling or defueling, proceed as follows (see figure 2-119):

a. Attach grounding cable with M83413-1 electrical ground connector (clamp type) to a padeye (1).

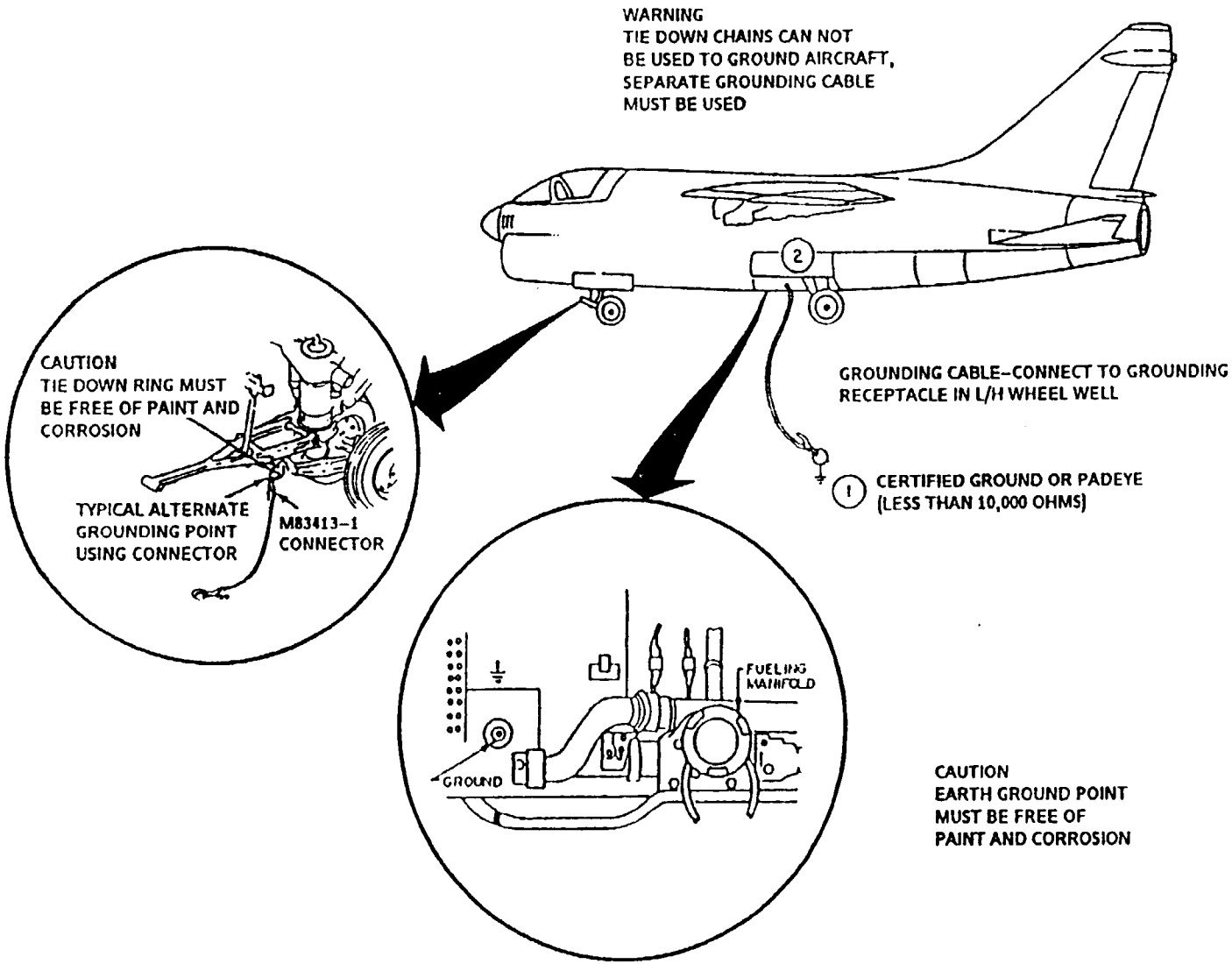

FIGURE 2-116. Carrier-based attack (A-3, A-4, A-6, A-7, AV-8, EA-6) aircraft, parked evolution and stores loading/unloading evolution.

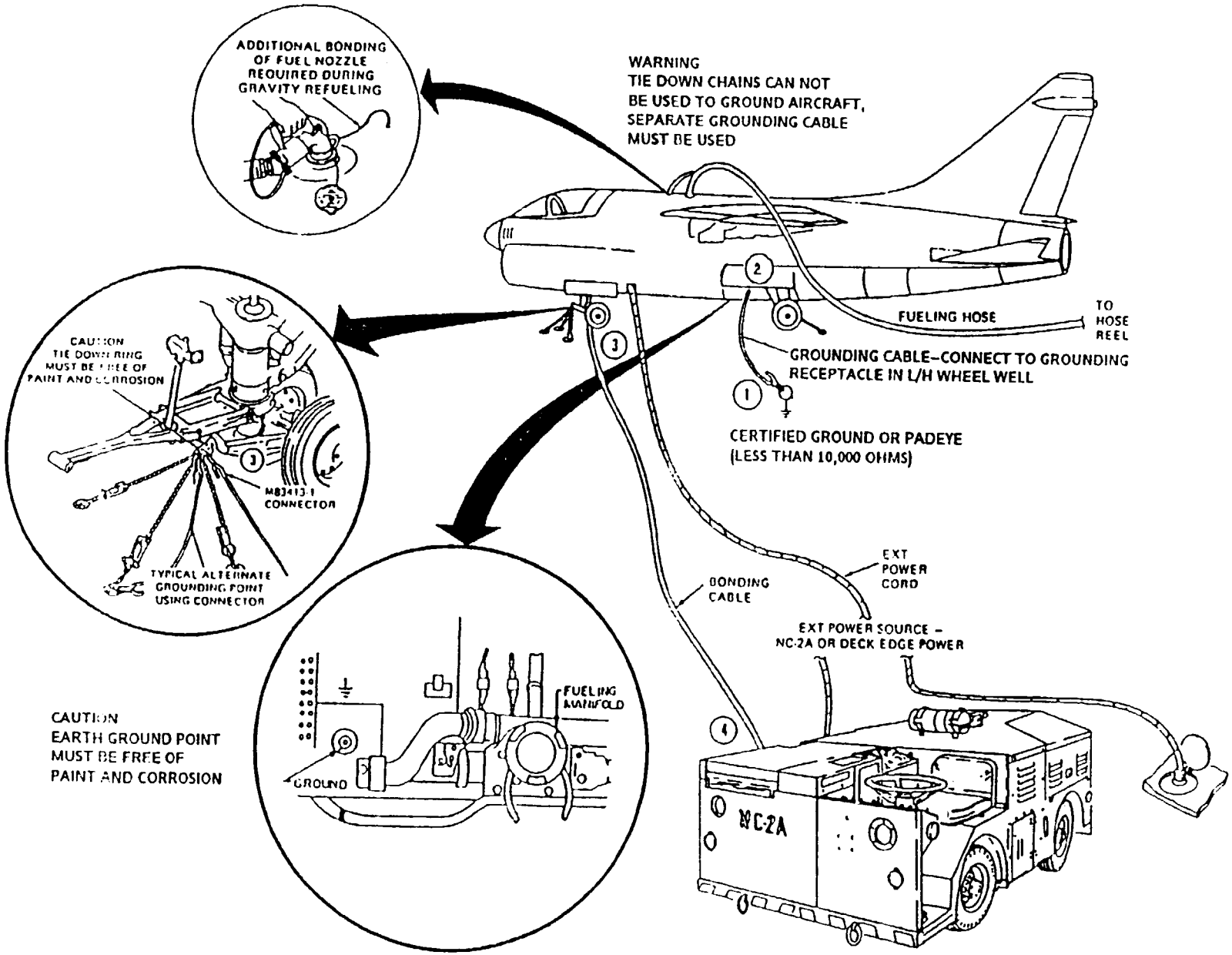

FIGURE 2-117. Carrier-based A-7 aircraft, fueling/defueling evolution.

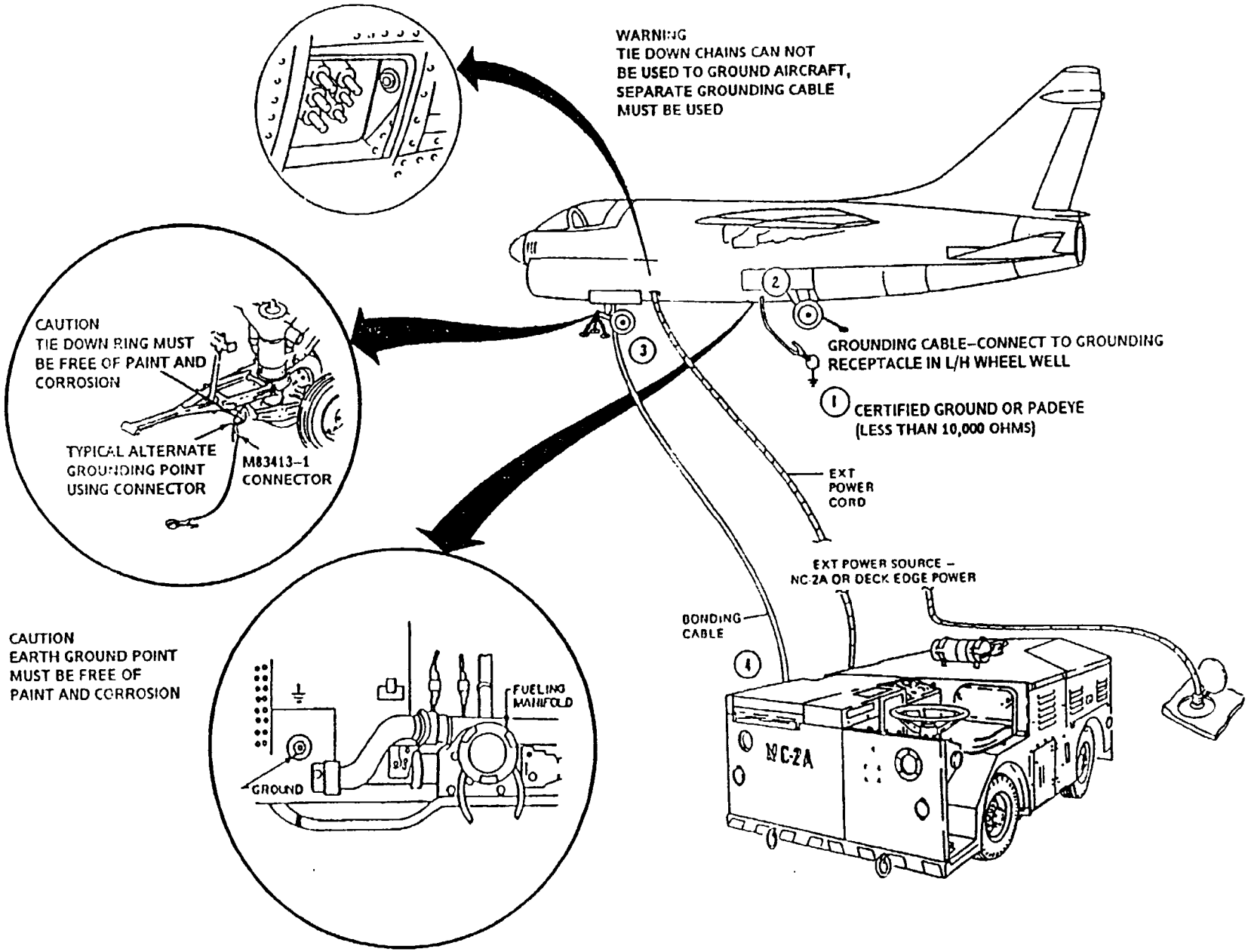

FIGURE 2-118. Carrier-based A-7 aircraft, maintenance evolution.

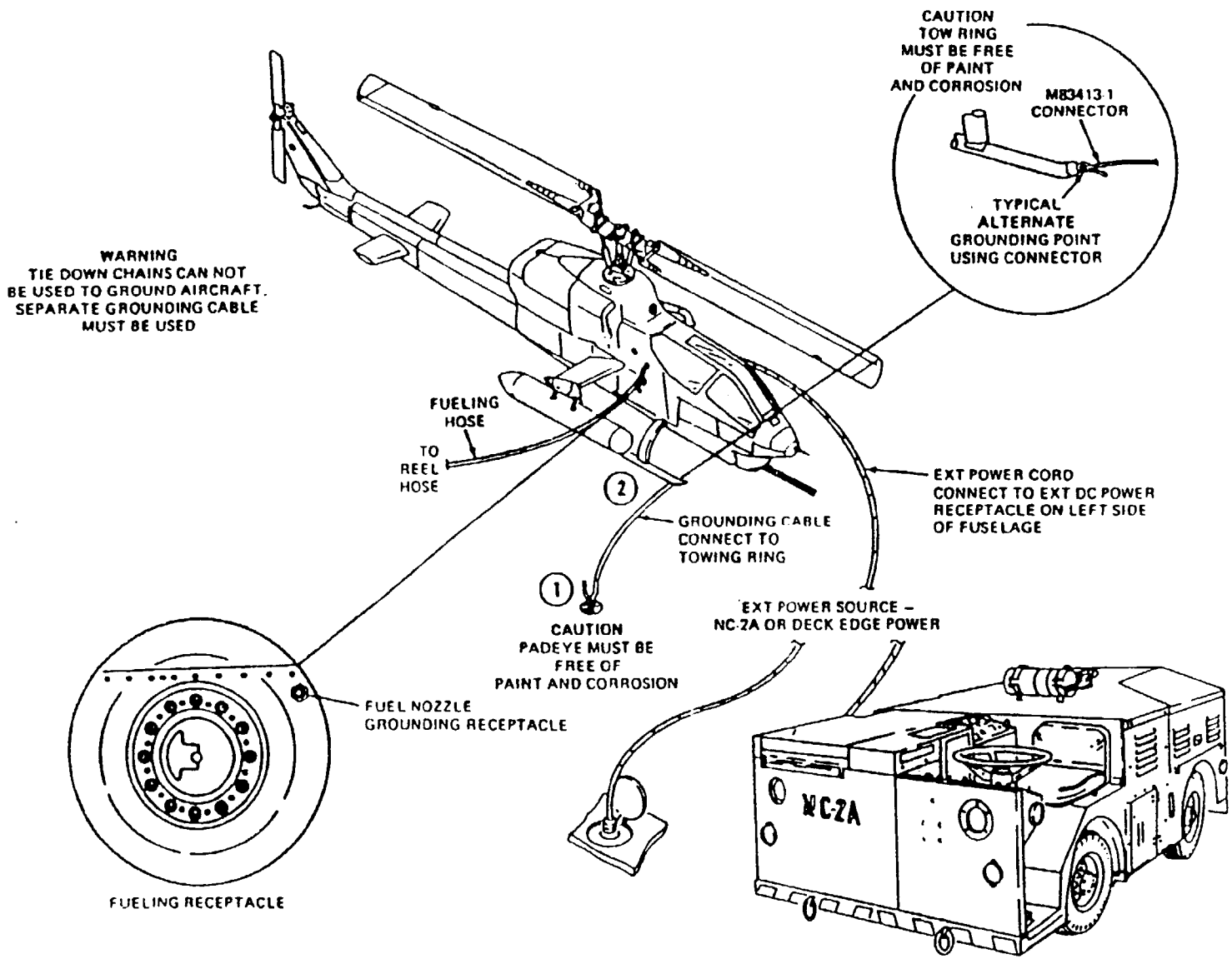

FIGURE 2-119. Carrier-based AH-1 aircraft, fueling/defueling evolution.

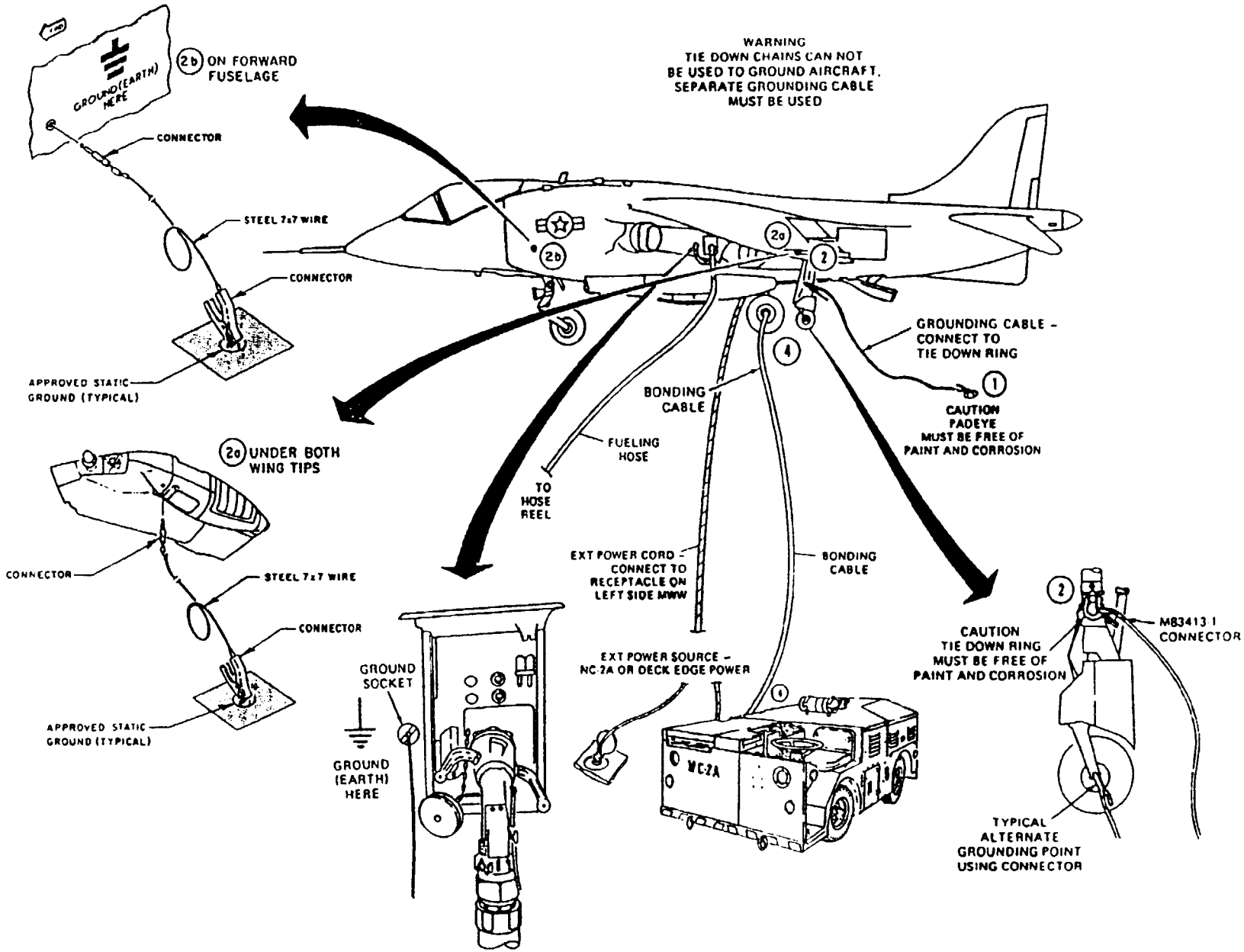

FIGURE 2-121. Carrier-based AV-8 aircraft, fueling/defueling evolution.

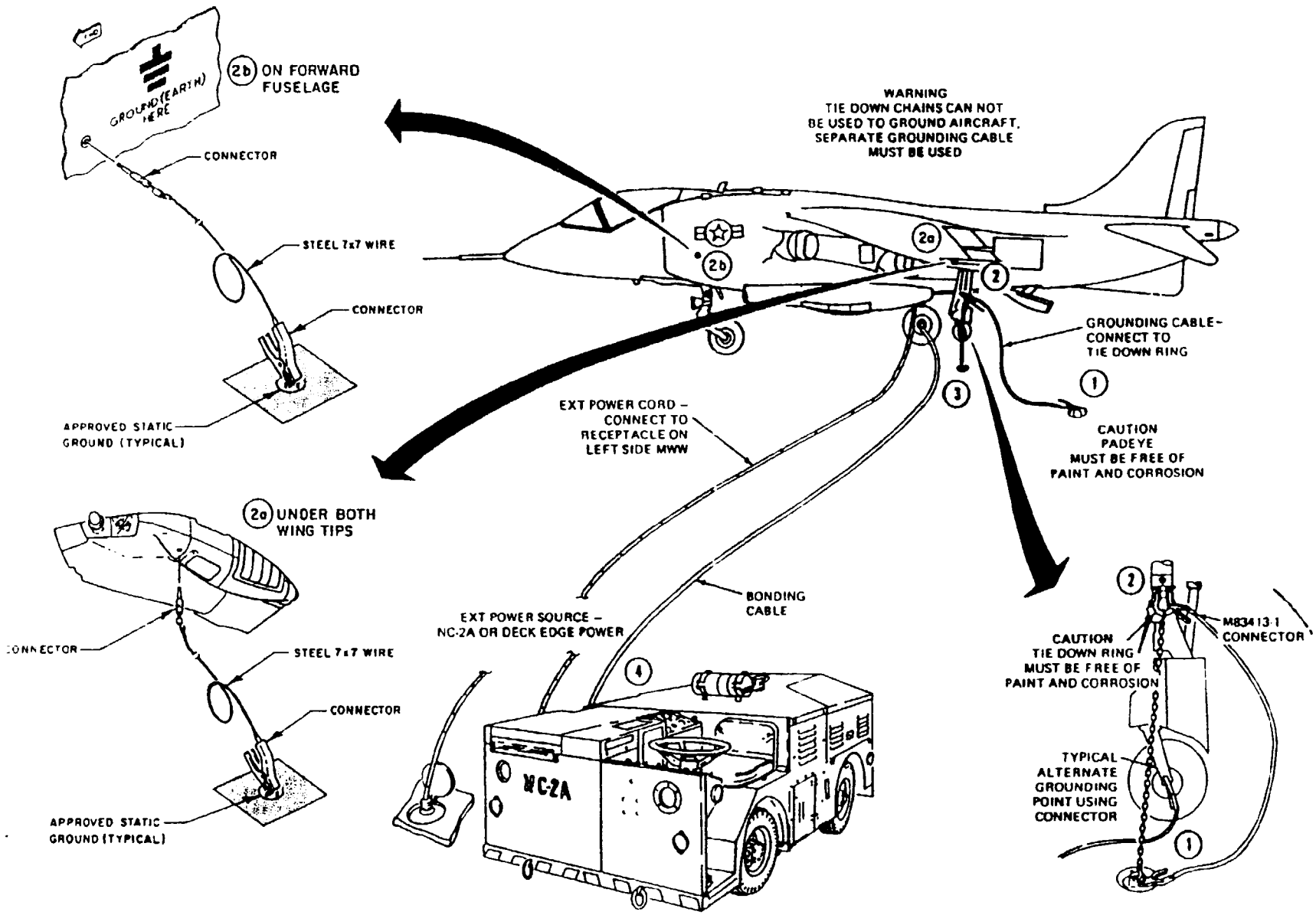

FIGURE 2-122. Carrier-based AV-8 aircraft, maintenance evolution.

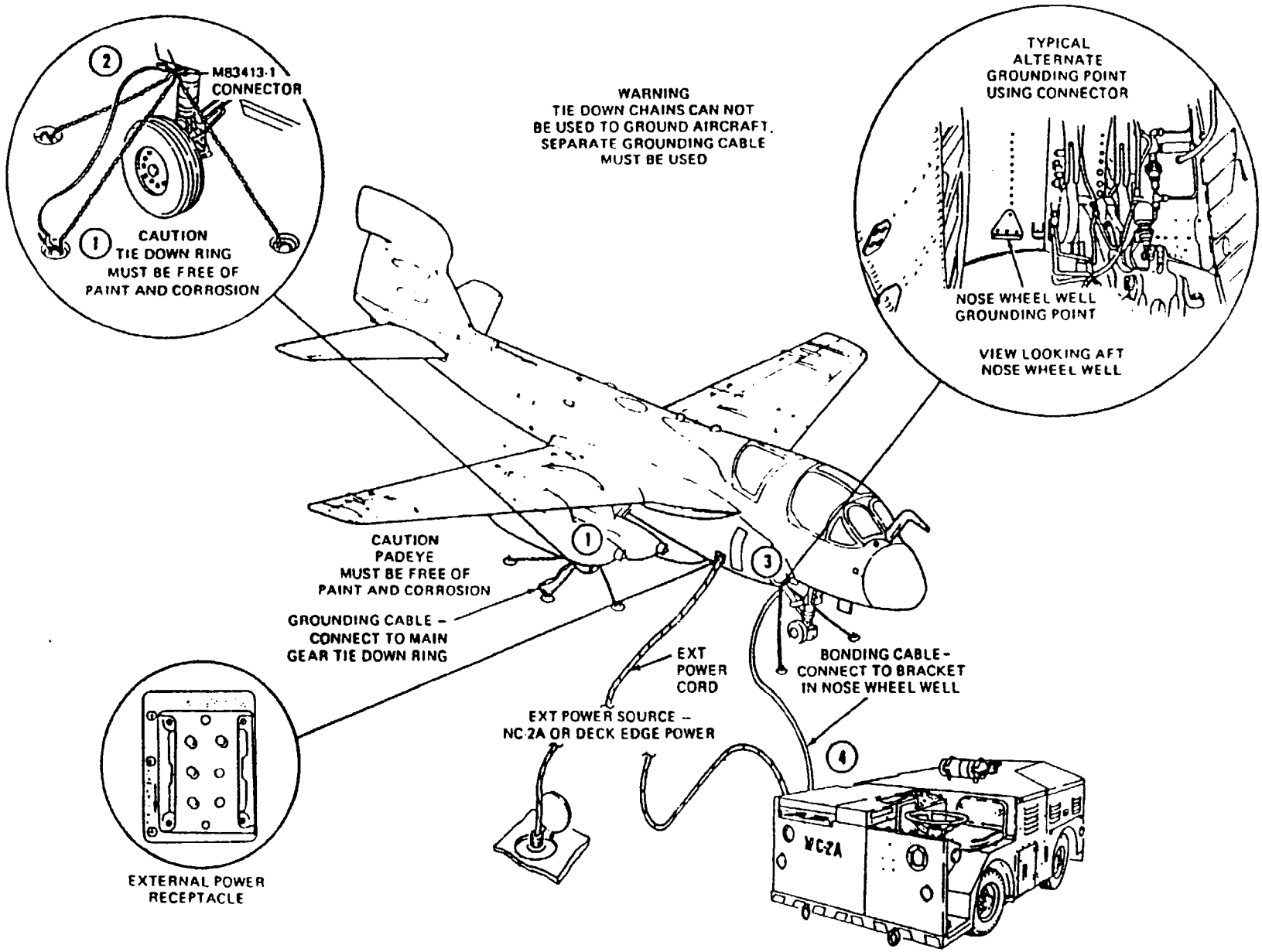

FIGURE 2-131. Carrier-based EA-6 aircraft, maintenance evolution.

b. Connect free end of grounding cable to main gear tiedown ring (2). If this location is not accessible, then connect grounding cable to bracket inside nose wheel well (typical alternate grounding point).
c. If using MEPP, attach bonding cable with M83413-1 electrical ground connector to bracket inside nose wheel well (3).
d. Connect free end of bonding cable to a bare metal area on the MEPP (4).
e. To remove grounding or bonding cable, reverse above procedures.

2.2.23 Carrier-based F-4 fueling/defueling evolution. To ground carrier-based F-4 aircraft when fueling or defueling, proceed as follows (see figure 2-132):

a. Attach grounding cable with M83413-1 electrical ground connector (clamp type) to a padeye (1).
b. Connect free end of grounding cable to engine nacelle grounding receptacle (typical) (2) or to grounding receptacles on main wings (2a) (as applicable).
c. If grounding receptacles are not accessible, then using a grounding cable with M83413-1 electrical ground connector at each end, follow step a, and connect free end of grounding cable to main gear tiedown ring (typical alternate grounding point).
d. If using MEPP, attach bonding cable with M83413-1 electrical ground connector to main gear tiedown ring (3).
e. Connect free end of bonding cable to a bare metal area on the MEPP (4).
f. To remove grounding or bonding cable, reverse above procedures.

2.2.24 Carrier-based F-4 maintenance evolution. To ground carrier-based F-4 aircraft when in the maintenance evolution, proceed as follows (see figure 2-133):

a. Attach grounding cable with M83413-1 electrical ground connector (clamp type) to a padeye (1).
b. Connect free end of grounding cable to engine nacelle grounding receptacle (typical) (2) or to grounding receptacles on main wings (2a) (as applicable).
c. If grounding receptacles are not accessible, then using a grounding cable with M83413-1 electrical ground connector at each end, follow step a, and connect free end of grounding cable to main gear tiedown ring (typical alternate grounding point).
d. If using MEPP, attach bonding cable with M83413-1 electrical ground connector to main gear tiedown ring (3).
e. Connect free end of bonding cable to a bare metal area on the MEPP (4).
f. To remove grounding or bonding cable, reverse above procedures.

2.2.25 Carrier-based fighter aircraft (F-4, F-14, F-18) parked evolution and stores loading/unloading evolution. To ground carrier-based fighter (F-4, F-14, F-18) aircraft when in the parked evolution and stores loading/unloading evolution, proceed as follows (see figure 2-134):

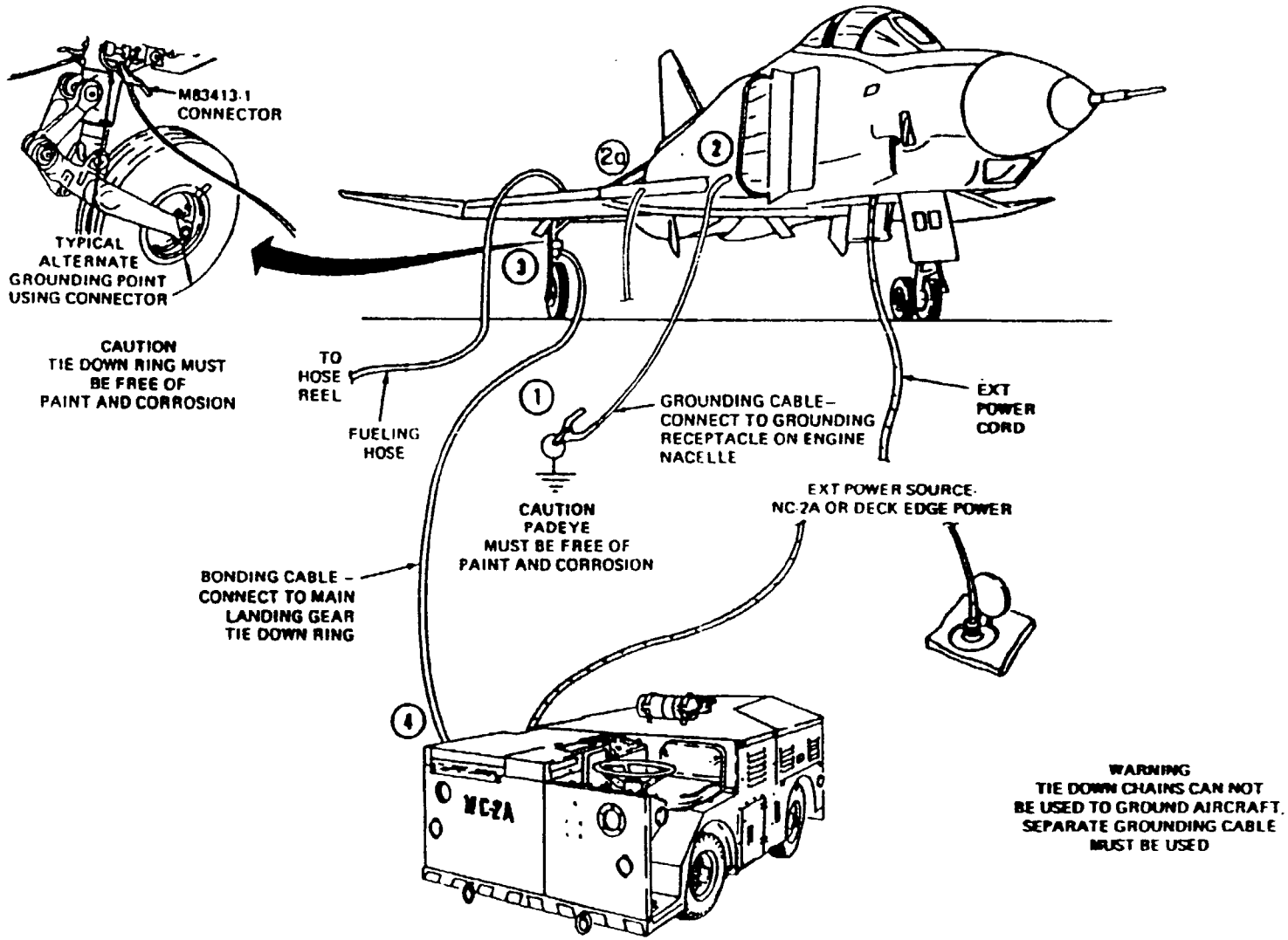

FIGURE 2-132. Carrier-based F-4 aircraft, fueling/defueling evolution.

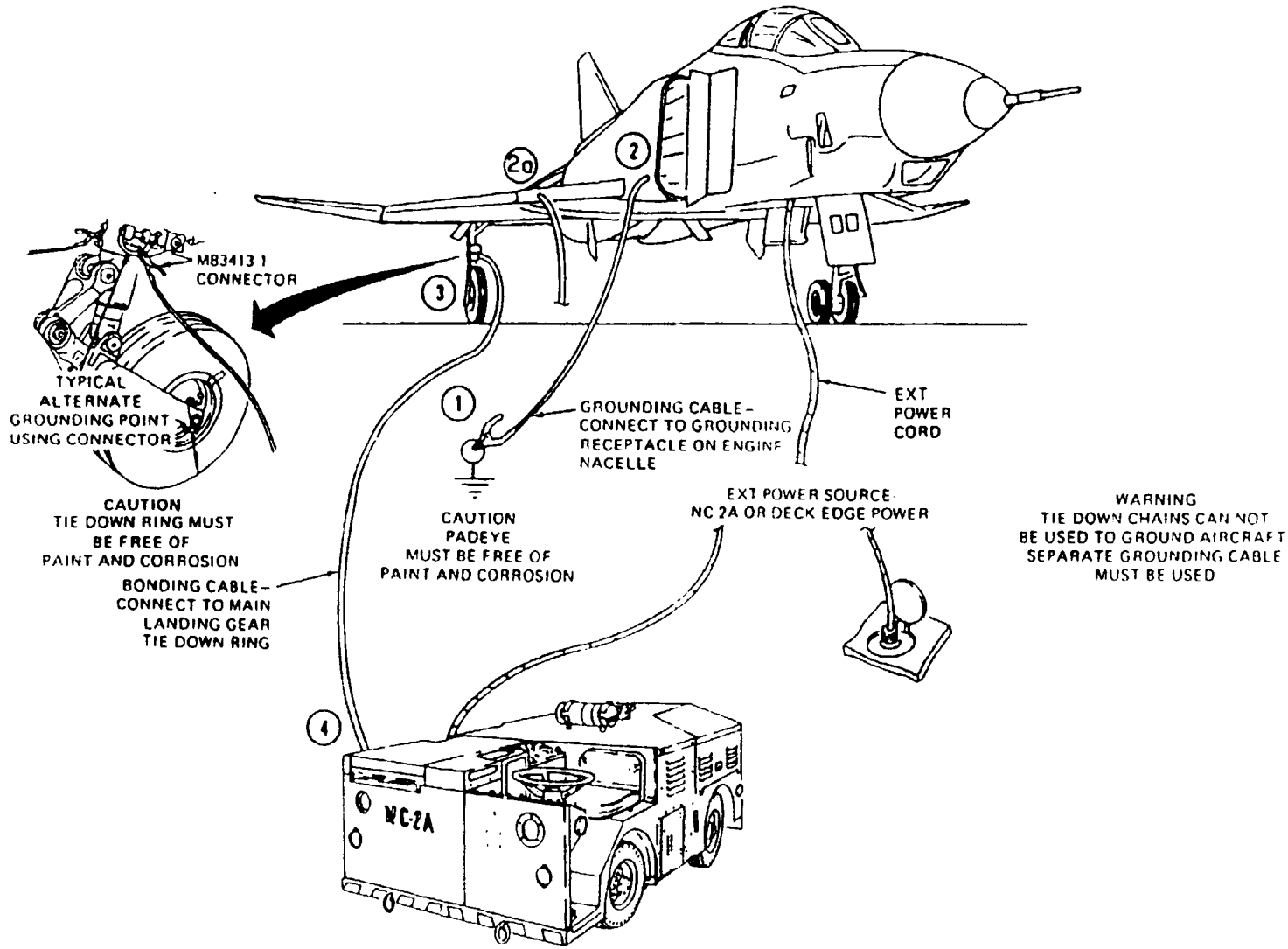

FIGURE 2-133. Carrier-based F-4 aircraft, maintenance evolution.

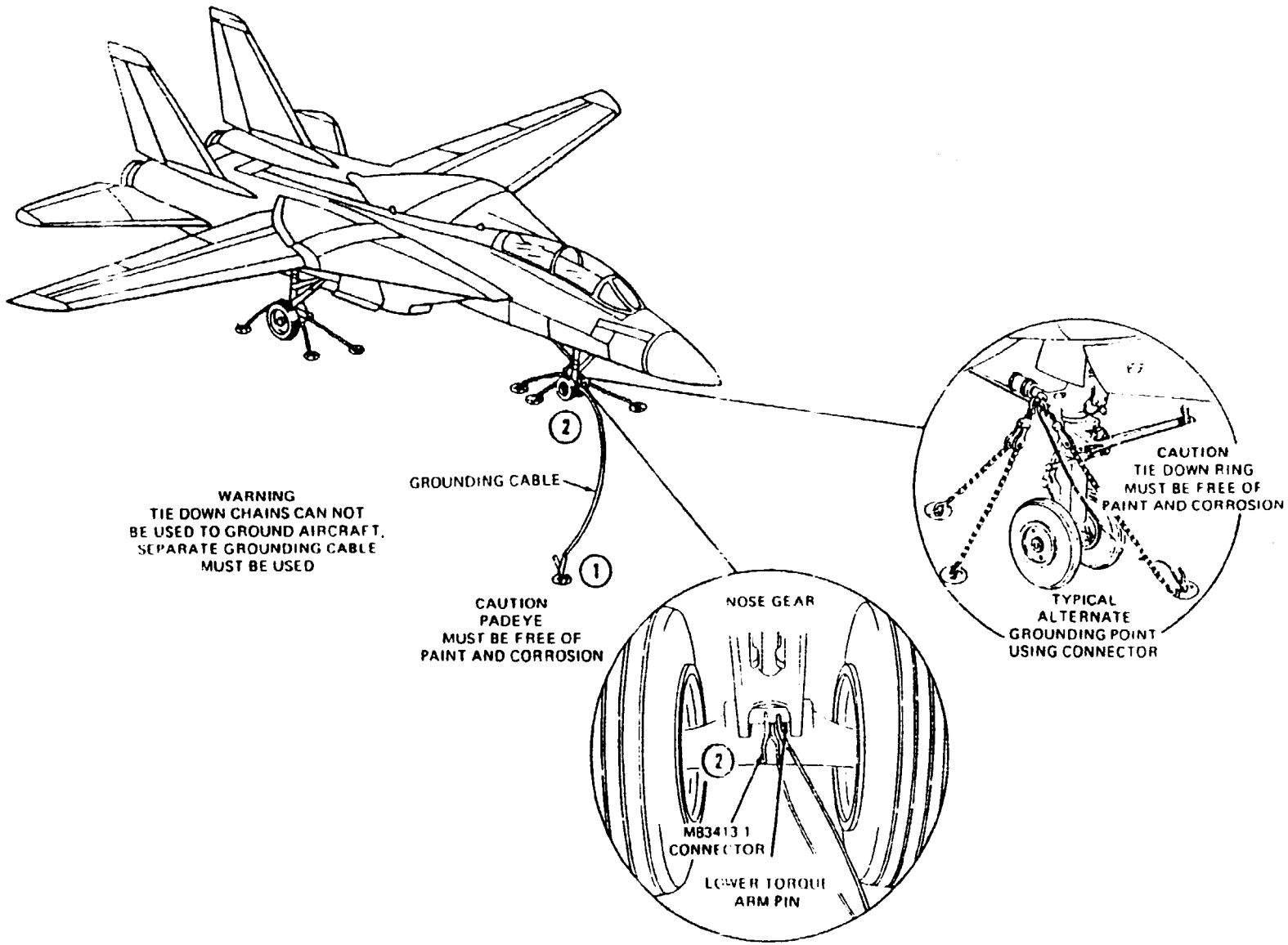

FIGURE 2-134. Carrier-based fighter (F-4, F-14, F-18) aircraft, parked evolution and stores loading/unloading evolution.

a. Attach grounding cable with M83413-1 electrical ground connector (clamp type) to a padeye (1).
b. Connect free end of grounding cable to lower torque arm pin on nose gear (2). If this location is not accessible, then connect grounding cable to nose gear tiedown ring (typical alternate grounding point).
c. To remove grounding cable, reverse above procedures.

2.2.26 Carrier-based F-14 fueling/defueling evolution. To ground carrier-based F-14 aircraft when fueling or defueling, proceed as follows (see figure 2-135):

a. Attach grounding cable with M83413-1 electrical ground connector (clamp type) to a padeye (1).
b. Connect free end of grounding cable to lower torque arm pin on nose gear (2). If this location is not accessible, then connect grounding cable to nose gear tiedown ring (typical alternate grounding point).
c. If using MEPP, attach bonding cable with M83413-1 electrical ground connector to lower torque arm pin (3).
d. Connect free end of bonding cable to bare metal area on the MEPP (4).
e. To remove grounding or bonding cable, reverse above procedures.

2.2.27 Carrier-based F-14 maintenance evolution. To ground carrier-based F-14 aircraft when in the maintenance evolution, proceed as follows (see figure 2-136):

a. Attach grounding cable with M83413-1 electrical ground connector (clamp type) to a padeye (1).
b. Connect free end of grounding cable to lower torque arm pin on nose gear (2). If this location is not accessible, then connect grounding cable to nose gear tiedown ring (typical alternate grounding point).
c. If using MEPP, attach bonding cable with M83413-1 electrical ground connector to lower torque arm pin (3).
d. Connect free end of bonding cable to bare metal area on the MEPP (4).
e. To remove grounding or bonding cable, reverse above procedures.

2.2.28 Carrier-based F-18 fueling/defueling evolution. To ground carrier-based F-18 aircraft when fueling or defueling, proceed as follows (see figure 2-137):

a. Attach grounding cable with M83413-1 electrical ground connector (clamp type) to a padeye (1).
b. Connect free end of grounding cable to nose wheel well grounding receptacle (typical) (2).
c. If grounding receptacles are not accessible, then using a grounding cable with M83413-1 electrical ground connector at each end, follow step a, and connect free end of grounding cable to main gear tiedown ring (typical alternate grounding point).

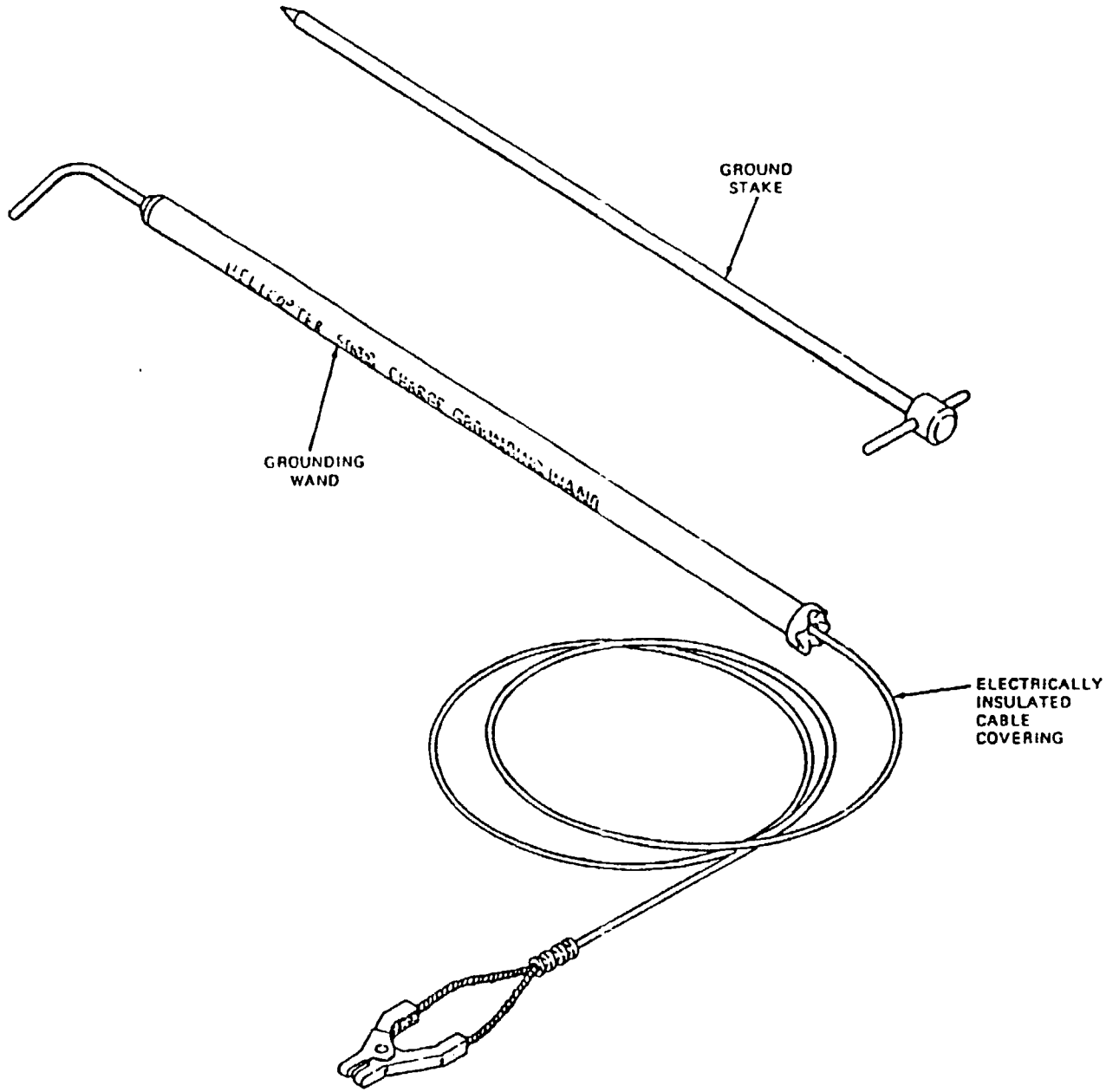

FIGURE 3-4. Helicopter grounding wand.

3.4.4 Servicing aircraft with water, oxygen, and hydraulic carts. Similar precautions are required to ground and bond the aircraft during water, oxygen, and hydraulic services. Where metal hoses are used between oxygen or nitrogen cart and aircraft, bonding is unnecessary.

3.4.5 Temporary grounding. In areas where no approved static or power grounds exist, metal rods may be driven into the ground at suitable points adjacent to the proposed aircraft parking position. For temporary grounds that may be used for some period of time, these rods should be approximately 8 ft. long and 0.875 in. in diameter. Care must be taken that the rod is not driven into a place where it will damage underground services.

3.4.5.1 For aircraft operating in the field, a temporary ground may be obtained by driving a metal rod approximately 3 to 4 ft long and 0.5 in. in diameter into the ground adjacent to the parked aircraft. This usually provides an adequate static ground. The quality of the ground depends on the type of soil and the amount of moisture available. The ground resistance can be improved by saturating the area with water.

3.4.5.2 A temporary ground rod that is in use for some time should have its ground resistance measured on a frequent basis. The resistance should be less than 10,000 ohms. If it is not, consideration should be given to driving additional or longer rods in order to reduce ground resistance.

3.4.5.3 In geographical areas covered by deep ice, such as Antarctica, establish a temporary ground(s) as follows:

a. Drive a metal rod approximately two feet long and 0.5 inches in diameter into the ice.

b. During fueling operations, follow the triangulation bonding and grounding procedures outlined in the handbook using the temporary grounding rod (see paragraph 3.4).

3.5 Actual grounding problems. The following are excerpts from the Naval Safety Center files. These narrative sections are reproduced here only to demonstrate the actual types of problems that are encountered in daily fleet operations.

3.5.1 Narrative: "WHEN A.C. AND D.C. POWER WAS APPLIED TO ACFT, THE MAINT PERS RECEIVED A SHOCK FROM THE SKIN OF THE ACFT. TROUBLESHOOTING OF THE ELECT SYS REVLD THAT EXTERNAL A.C. D.C. POWER RECEPTACLE COMMON GROUND WIRE NR P 49AON HAD MELTED INSULATION. OXIDIZATION AND CORROSION VISIBLE AT THE TERMINAL ON THE ACFT SKIN WAS THE ONLY APPARENT REASON FOR OVERHEATING. ALL CONNECTIONS WERE SECURE."

Comment: Prior to any maintenance action, aircraft must be appropriately grounded.

3.5.2 Narrative: "DURING TURN AROUND INSP PLANE CAPTAIN APPLIED ELECT POWER UTILIZING THE FLIGHT LINE ELECT DISTRIBUTION SYSTEM. UPON CONTACTING AIRCRAFT, PLANE CAPTAIN RECEIVED MILD BUT DEFINITE ELECT SHOCK. ELECT POWER WAS SECURED. WATER WAS STANDING ON RAMP AS A RESULT OF WEATHER CONDITIONS

CONSISTING OF LOW OVERCAST AND RAIN. INVEST BY PUBLIC WORKS ELECT SHOP PERS REVEALED BROKEN GROUNDING PLUG WHICH PREVENTED THE CABLE FROM ACHIEVING PROPER GROUND. THIS INCIDENT REEMPHASIZED THE NECESSITY FOR PROPER HANDLING AND MAINTENANCE OF FLIGHT LINE ELECT POWER DISTRIBUTION SYSTEM IN ORDER TO AVOID SERIOUS PERSONNEL INJURY, ESPECIALLY UNDER ADVERSE RAMP CONDITIONS."

Comment: Emphasizes need to inspect grounding hardware.

3.5.3 Narrative: "AFTER SHUTDOWN FM FLT, ORD MAN BEGAN PROCED FOR LOADING MK82 PRACTICE BOMBS ON UTBD RACKS. AFTER COMPLETION OF JETTISON REL CKS, JETTISON CART WAS BEING INSTLD IN PORT OUTBD STA. AS CAP AND CART WERE BEING INSERTED INTO BREECH, CART EXPLODED. INJURY TO ORD MAN INVOLVED WAS SUPERFICIAL AND THERE WAS NO DAM TO ACFT. IMMED AFET INCDT, ORD INVOLVED CKED BOTH CKPTS TO ASCERTAIN JETTISON ASCERTAIN JETTISON SW POSITION, AND STATED BOTH WERE IN THE OFF/SAFE POSIT. HOWEVER, ACFT WAS UNGROUNDED. THE MOST LIKELY CAUSE OF INCDT WAS THE FAIL OF ORDNANCEMAN TO GROUND ACFT PRIOR TO EXECUTING LOADING PROCEDURES."

Comment: The next ordnance man may not be so lucky.

3.5.4 Narrative: "ACFT WOULD NOT ACCEPT EXT DC POWER FOR START. UPON REMOVAL OF DECKING PLT SIDE, DISCOVERED DC EXT POWER RECEPTACLE GROUND LEAD WAS NOT ATTACHED. FURTHER INVEST REVLD GROUND LEAD HAD BURNED A HOLE IN MOUNTING AREA, THUS FREEING THE LEAD. BELIEVE ATTACHING BOLT WORKED LOOSE OVER A PERIOD OF TIME AND CAUSED POOR CONNECTION. ANY LOOSENESS COUPLED WITH EXCESSIVE HEAT GEN BY HIGH CURRENT CAN RESULT IN THIS SIT."

3.5.5 Narrative: "WHILE PERFORMING BEFORE START CHECKLIST WITH EXT D.C. PWR APPLIED, CREW NOTICED SMOKE COMING FROM BENEATH PLTS DECKING. EXTERNAL PWR IMMED SECURED. T/S REVLD LOOSE GROND WIRE FOR DC EXT PWR RECEPTACLE. REPLACED GROUNDING WIRE."

3.5.6 Narrative: "JUST BEFORE LIGHT OFF, ON START OF NO. 2 ENG, PLT SMELLED ELECTRICAL FUMES AND NOTICED SMOKE COMING FROM UNDER HIS DECKING. HE SHUTDOWN BOTH ENG AND SECURED ACFT. TROUBLESHOOTING REVLD DC EXT PWR RECPT GROUND WIRE LOOSE, BURNING THRUGH ATTACHING STRINGER."

Comment: Para 3.5.4, 3.5.5 and 3.5.6 are typical of many reports and illustrate not only the need for constant vigilance but the serious consequences that poor maintenance will cause. Any aircraft fire, especially onboard a carrier, can be disastrous.

3.5.7 Narrative: "WHILE DEFUELING, VAPOR WAS OBSERVED IN THE STBD WHEEL WELL. INVEST REVLD ALL FOUR ENG HRD BOTTLES HAD DISCHARGED. THE FOUR PRIMARY CARTRIDGES WERE EXPENDED. STATIC ELECTRICITY BUILD-UP CAUSED BY IMPROPER GRND OF FUEL TRUCK TO ACFT. THE FUEL TRUCK TO ACFT GROUNDING WIRE WAS CONNECTED TO THE LANDING GEAR SCISSORS STRUT, VICE THE GROUNDING KNOBS PROVIDED ON THE FORWARD SIDE OF THE LANDING GEAR. THIS SCISSORS STRUT IS PAINTED AND POSSIBLY COULD HAVE CAUSED AN INPROPER GRND. PROPER GROUNDING PROCEDURES HAVE BEEN STRESSED IN THE CMD. MAINT ERROR SQD."

Comment: This illustrates not only the need to make sure that the bonding cable is attached to a clean metallic surface but the need to do an even better job of stressing these important requirements.

3.5.8 Narrative: "WHILE TROUBLESHOOTING A FUEL QUANTITY DISCREP, ELECTRICIAN, AE2 SOUCHAK, RECEIVED AN ELECTRICAL SHOCK WHILE HANDLING A CANNON PLUG IN FLAP WELL. INVESTIGATION REVLD THAT ACFT WAS NOT GROUNDED (NOR REQUIRED TO BE)."

Comment: Cannot agree with the comment "(nor required to be)." The local requirements should be rewritten.

3.5.9 Narrative: "WHILE FUELING FOR TRAINING FLIGHT, LIGHTNING STRUCK IN CLOSE PROXIMITY TO AIRCRAFT AND FUEL TRUCK. OF THE TWO CREWMEMBERS FUELING THE AIRCRAFT, ONE WAS KNOCKED TO THE GROUND AND THE OTHER LEFT DAZED BUT STILL ON HIS FEET. THE DRIVER OF THE FUEL TRUCK WAS APPARENTLY UNAFFECTED. THE FUELING OPERATION WAS SECURED AND THE CREWMEMBERS WERE TAKEN TO THE HANGAR AREA WHERE CORPSMEN CONDUCTED AND INITIAL EXAMINATION. THE CREWMEMBERS WERE SUBSEQUENTLY TRANSPORTED TO THE MEDICAL CENTER AND LATER RELEASED WITH NO APPARENT INJURIES. BECAUSE ACCEPTED AND PROVEN SAFETY PROCEDURES WERE FOLLOWED, A TRAGEDY OF IMMENSE PROPORTIONS WAS UNDOUBTEDLY AVERTED. ALTHOUGH THE SKY WAS OVERCAST WITH SOME CUMULUS CLOUDS IN THE AREAS, THERE WAS NO RAIN OR LIGHTNING ACTIVITY IN THE AREA. AS A RESULT, THE DRIVER AND CREWMEMBERS ALL WERE SATISFIED THAT CONDITIONS WERE SAFE FOR REFUELING. AT FIRST, IT WAS BELIEVED THAT THE AIRCRAFT HAD BEEN STRUCK BY THE LIGHTNING; HOWEVER, A THOROUGH INSPECTION BY QA PERSONNEL REVEALED NO DAMAGE OR OTHER INDICATION THAT THE AIRCRAFT SUSTAINED A DIRECT HIT OR CONDUCTED ANY PORTION OF THE CHARGE. NO DAMAGE TO THE FUEL TRUCK WAS IN EVIDENCE OR LATER REPORTED BY THE FUEL FARM. FOLLOWING THE LIGHTNING STRIKE, IT WAS NOTED THAT THE GROUNDING WIRE HAD NUMEROUS BURN SPOTS AND WAS SMOKING. FURTHER INSPECTION OF THE GROUNDING WIRE REVEALED THAT IT CONDUCTED A SUBSTANTIAL ELECTRICAL CHARGE AS EVIDENCED BY DISCOLORED WIRE, CRYSTALIZED METAL, AND MELTED POLYMER COATING. DURING THE INITIAL EXAMINATION BY CORPSMEN, ONE OF THE CREWMEMBERS COMPLAINED OF A TINGLING SENSATION IN HIS RIGHT ARM. SUBSEQUENT INVESTIGATION REVEALED THAT HE WAS HOLDING ON TO THE FUELING NOZZLE AT THE TIME OF THE STRIKE. THE OTHER CREWMEMBER INITIALLY HAD BLURRED VISION FOLLOWING THE STRIKE. IT IS BELIEVED THAT THIS WAS PROBABLY CAUSED BY HIM HITTING HIS HEAD ON THE UNDERSIDE OF THE WING ROOT AT THE TIME OF THE INCIDENT. AFTER THOROUGH INVESTIGATION BY THE AVIATION AND GROUND SAFETY OFFICER, IT WAS DETERMINED THAT ALL APPLICABLE DIRECTIVES AND REGULATIONS WERE STRICTLY ADHERED TO BY ALL PERSONNEL AND COMMANDS CONCERNED AND AS A RESULT, FURTHER SUBSTANTIATES THE VALUE OF PROPERLY GROUNDING THE AIRCRAFT AND FUEL TRUCK DURING FUELING OPERATIONS." This says it all - it is up to you to READ AND HEED!"

Comment: None required.

3.6 Measurement of static ground and electrical power ground points. Ground resistance measurements should be taken at periodic intervals to ensure that these measurements are made during different seasons over a period of years. A 15-month interval is recommended, although local site conditions may dictate other measurement intervals.

3.7 Grounding hardware/receptacle considerations. In all of the previously mentioned grounding procedures and considerations the receptacle is the preferred method of connection. Care must be taken to ensure that the receptacle is in good condition. Any evidence that the mating connection is loose indicates that the receptacle is defective and it must be replaced.

Periodically, all receptacles must be inspected and their resistance to the aircraft structure should be measured and found to be less than 0.1 ohm. An MS 3493 plug should be inserted in the receptacle and found to be firmly seated. The pull required to withdraw the plug should be between 8 and 14 lb. A pull of less than 8 lb indicates a weak or damaged receptacle; a pull exceeding 14 lb may indicate a corroded receptacle. In either case, the receptacle must be replaced. Additionally, the complete cable must be maintained in good electrical condition.

CAUTION: Use of alligator clips or braided panel strap to ground or bond aircraft and support equipment is prohibited.

3.7.1 If a grounding receptacle is not available, an approved grounding cable constructed in accordance with MIL-C-83413/1 or /3 (with MIL-C-83413/7 clamps, as applicable) must be used. Care must be taken that the clamp-type connector, if used, conforms to MIL-C-83413 and must be checked for weak spring, deformed or rusty jaws, or any other defect which would prevent a good connection.

3.8 Grounding hardware military specification reference list. Grounding hardware military specification sheets are listed in Section 1, paragraph 1.2.

SECTION 4

4.0 THEORETICAL BASIS FOR AIRCRAFT GROUNDING

This section provides theory, background, and information necessary to understand the rationale behind the requirements for aircraft grounding and bonding. Theory and equations associated with both electrostatic charge generation in aircraft and grounding effects are discussed. The different aircraft scenarios or servicing situations are introduced with emphasis on the hazards that can be encountered.

4.1 Electrostatic theory. Static electricity, by definition "electricity at rest," consists of opposite electrical charges that are usually kept apart by insulators. Potential differences involved may amount to thousands of volts. However, the flow of electricity during generation and accumulation is small, in the range of millionths of an ampere. A primary manifestation of static electricity is the discharge or sparking of the accumulated charges. Static electricity is generated by the separation of like or unlike bodies. Electrostatic charges, positive and negative, always occur in pairs. They become evident when these pairs, having been in contact with each other, are separated. For significant potential to be developed, the bodies holding the charges must become, and remain, insulated from each other. Insulation may occur through complete physical separation of the bodies or because at least one of the bodies is an insulator.

4.2 Scenarios. The following aircraft evolutions or scenarios are considered in this manual:

a. Stores handling (including ordnance)
b. Maintenance (flight line and hangar)
c. Fueling
d. Parked

Potential hazards considered during each scenario are:

a. Static electrical shock to personnel
b. Power system electrical shock to personnel
c. Ordnance misfire and/or inadvertent ordnance or stores release
d. Fuel vapor ignition
e. Damage or upset to electronic subsystems

4.3 Energy sources. The source mechanism and source magnitude of the electrical energy is critical in assessing the possible occurrence of a hazardous situation. The following energy sources are to be considered during the aircraft evolutions of stores handling, maintenance, fueling, and aircraft parked:

a. Static
   - Triboelectric
   - Induced
   - Friction
b. Power
   - Ground fault
   - RF electromagnetic energy
   - Lightning

4.6.1.5 These values exceed the threshold hazard values for ignition for fuel vapor. Therefore, fuel vapor ignition should be considered during fuel transfer. For the electrically isolated aircraft, fuel vapor ignition, equipment upset, and reflex shock reaction by personnel must be considered.

4.6.1.6 The source level has been established as due to charge induced by storm activity. Energy levels may then reach

$$U = 1/2CV^2 = 1/2\ (0.005\ \mu F)(60\ kV)^2 = 9\ J.$$

These levels exceed threshold values for all hazards:

4.6.2 Time duration considerations. Some of the phenomena cited in paragraph 4.6.1 are transient in nature. Knowledge of their duration is necessary to assess them as realistic hazards. Induced voltages, friction voltages, and voltage buildups following fueling are considered transients.

4.6.2.1 Using the ungrounded aircraft resistance of 40 MΩ, an aircraft capacitance to ground of 0.005 μF, and a safe voltage limit of less than 30V, the following time durations were computed from:

$$t = RC \ln \left(\frac{E_i}{E_s} \right)$$

where t = time to reach E_s after removal of source

R = aircraft resistance to ground

C = aircraft capacitance to ground

E_i = initial (source) voltage

E_s = safe voltage level

Transient Source	E_i Source Magnitude	Time to E_s
Friction	27.0 kV	1.36 sec
After-fueling potential	2.5 kV	0.88 sec
Induced	60.0 kV	1.52 sec

4.6.2.2 Any transient is objectionable from a safety standpoint. As stated earlier, heart action discoordination (fibrillation) threshold levels have time durations as low as 0.2 sec. Thus, the duration of even the shortest of the three transients considered is unacceptably long.

4.6.3 Hazards. Ungrounded aircraft must be considered to be in jeopardy from the indicated energy source, since at least one (and generally more than one) hazard threshold level is exceeded during each scenario. These results are

summarized in table 4-V below. The possibility of these hazardous events occurring is ensured by the physical data available. However, each is dependent on a number of factors which may occur simultaneously only very rarely (for example, the refueling of an aircraft with 40 M impedance to earth, a fuel spill, and an electrical spark located at the right point in the volume of fuel vapor or misted fuel to cause ignition). In any single one-time event, such as an aircraft repair or refueling operation, consideration could be given to the fact that hazardous combinations appear so seldom that they may be neglected. However, when consideration is given to the number of naval aircraft involved, the rapid tempo of operations, the fact that these are military operations (not always conducted under ideal conditions), the high cost of equipment, and the threat to personnel safety, electrical grounding for safety becomes an imperative requirement. Electrical airframe grounding, like safety belts in automobiles, is statistically indicated by, among other things, the vast numbers involved.

TABLE 4-V. Potential hazard relationship to energy sources and scenarios.

Scenario	Energy Source					
	Tribo	Friction	Fuel trans	Atmospheric induced fields	External power system	Lightning
Maintenance	AD	ADE	-	ADE	BD	BCDE
Fuel	AD	ADE	ACDE	ACDE	BCDE	BCDE
Stores Handling	AD	ACE	-	ACE	-	BDCE
Park	AD	ACDE	-	ACDE	-	BCDE

where: A = Static shock to personnel
B = Power shock to personnel
C = Ordnance EED/stores misfire/release
D = Fuel vapor ignition
E = Electronic equipment damage

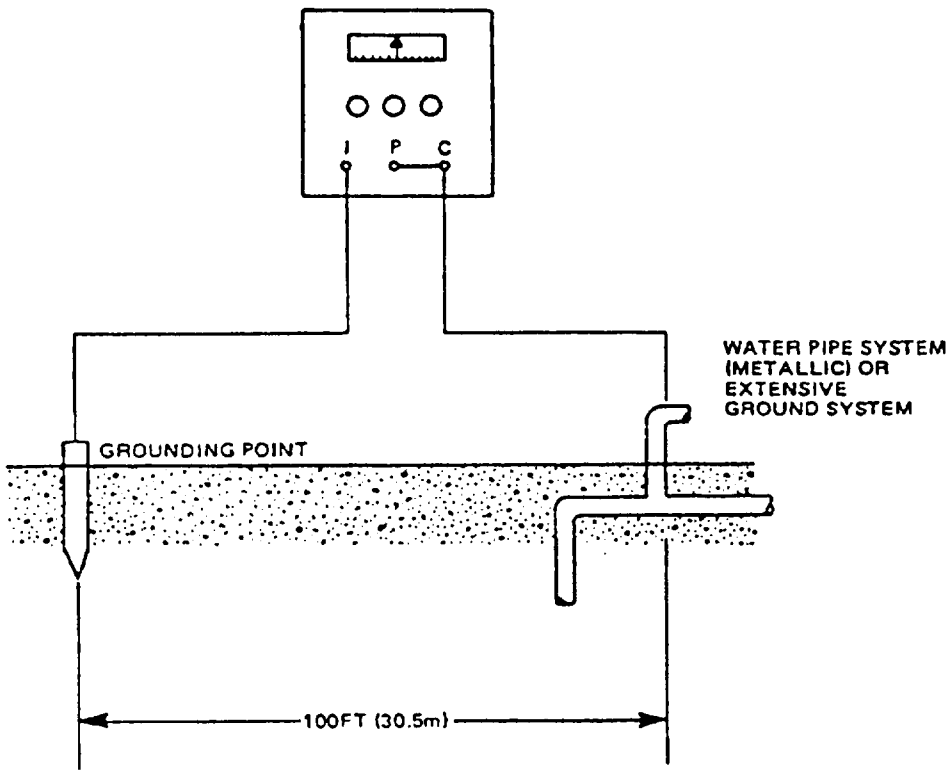

FIGURE 5-6. Two-terminal method test setup.

c. Locate a large, unpainted, metal water pipe at least 100 ft (30.5 m) from the ground point being evaluated and connect test lead C from the tester to this water pipe.

d. Adjust the resistance dials on the tester until the indicator dial is centered (zeroed) on the scale. When the dial is centered, the resistance value (in ohms) of the ground point being evaluated can be read on the tester's digital readout.

5.4 Schedule for resistance testing of ground points. It is recommended that resistance measurements of a facility's ground points be performed periodically in order to determine if there has been any degradation of the grounding system. It is important to verify that the resistances of the ground points are below recommended maximum values in order to minimize likelihood of injury or damage. The recommended maximum resistance values are: less than 10 ohms for a power ground point and less than 10,000 ohms for a static ground point.

5.4.1 The recommended time interval between resistance testing is 14 months. This ensures that over a 6-year period the ground points will be tested during all seasons, thereby providing a profile of seasonal resistance variations. Depending on the number of ground points to be measured, it might be more feasible to employ a rotational method, rather than measure all of the points in a single time span. For example, if the facility were divided into seven sections, the measurement task would be initiated every two months in a different section.

5.4.2 The task of measuring ground points normally comes under jurisdiction of the public works department of the facility. Additionally, their responsibilities will include setting up and carrying out the test schedule.

5.5 Identification of ground points. It is recommended that ground points already measured should be identified in the manner indicated in figure 5-7. This identification indicates to personnel that the ground point is satisfactory.

5.6 The use of mooring eyes as static ground points. Mooring eyes (also referred to as padeyes) may be used as static ground points provided that they have been measured and identified in a proper manner (see paragraphs 5.3 and 5.5). Surveys (AIR-5181-1000) have indicated that samplings of the resistance values of mooring eyes showed them to be under 10,000 ohms and therefore acceptable as static ground points. Mooring eyes selected for use as static grounds must have their resistance measured and verified at intervals specified in paragraph 5.4.1.

5.6.1 Figure 5-8 shows typical mooring eye installation details. Additional information is available in NAVFACENGCOM Technical Specification TS-02614. At some facilities, a stainless steel bead has been welded to the upper exposed area of the mooring eye. This prevents corrosion buildup on the mooring eye and reduces its likelihood of providing a poor ground.

SECTION 6

6.0 INFORMATION FOR GUIDANCE ONLY.

6.1 Changes from previous issue. Vertical lines or asterisks are not used in this revision to identify changes with respect to the previous issue due to the extensiveness of the changes.

6.2 Subject term (keyword) listing.

Aircraft
Airframe
Cable
Electrical bonding
Electrical grounding
Electrical resistance
Maintenance
Procedures
Safety

Custodian:
Navy - AS

Preparing Activity:
Navy - AS
(Project EMCS-N105)

Supersedes page 277 of 1 November 1983