MIL-A-17161D(NAVY)
24 June 1985
SUPERSEDING
MIL-A-17161C(SHIPS)
18 November 1959

MILITARY SPECIFICATION

ABSORBER, RADIO FREQUENCY RADIATION (MICROWAVE ABSORBING MATERIAL), GENERAL SPECIFICATION FOR

This specification is approved for use by the Department of the Navy, and is available for use by all Departments and Agencies of the Department of Defense.

1. SCOPE

1.1 Scope. This specification covers the requirements for radio frequency (RF) radiation (microwave absorbing material (RAM)) absorber, hereinafter referred to as RAM (see 6.4.2).

1.2 Classification. The RAM shall be of the following classes, as specified (see 6.2)

Class 1 Bulk sheets of RAM which are capable of being cemented to bulkheads or life rails and which are designed to attenuate signals normally striking the surface. These sheets are intended to have sufficient flexibility to permit their application to a variety of uses.

Class 2 RAM designed to be rigid and self-supporting for use as a fence or stand-alone barrier between an offending source and a sensitive receiver, to attenuate the offending signal.

Class 3 RAM custom manufactured to become part of a specific piece of equipment. For example, the base of an antenna filled with RAM to change the antenna sidelobe or the electrical properties of some material specifically designed for one piece of equipment.

2. APPLICABLE DOCUMENTS

2.1 Government documents.

2.1.1 Specification and standards. Unless otherwise specified, the following specification and standards, of the issue listed in that issue of the Department of Defense Index of Specifications and Standards (DoDISS) specified in the solicitation, form a part of this specification to the extent specified herein.

SPECIFICATION

MILITARY

MIL-E-17555	Electronic And Electrical Equipment, Accessories, And Repair Parts, Packaging And Packing Of

STANDARDS

FEDERAL

FED-STD-601	Rubber, Sampling And Testing

MILITARY

MIL-STD-109	Quality Assurance Terms And Definitions
MIL-STD-454	Standard General Requirements For Electronic Equipment
MIL-STD-810	Environmental Test Methods And Engineering Guidelines
MIL-STD-1523	Age Control Of Age-Sensitive Elastomeric Materiel

(Copies of specifications and standards, required by manufacturers in connection with specific acquisition functions should be obtained from the contracting activity or as directed by the contracting officer.)

Beneficial comments (recommendations, additions, deletions) and any pertinent data which may be of use in improving this document should be addressed to. Commander, Space and Naval Warfare Systems Command (SPAWAR-8111), Washington, DC 20363-5100, by using the self-addressed Standardization Document Improvement Proposal (DD Form 1426) appearing at the end of this document, or by letter.

FSC EMCS

DISTRIBUTION STATEMENT A. Approved for public release, distribution is unlimited

2.2 Other publications. The following documents form a part of this specification to the extent specified herein. The issues of the documents which are indicated as DoD adopted shall be the issue listed in the current DoDISS and the supplement thereto, if applicable.

AMERICAN SOCIETY FOR TESTING AND MATERIALS (ASTM)

ASTM D518-74	Rubber, Checking And Cracking Of, Resistance To Light
ASTM D568-77	Test Method For Rate Of Burning And/Or Extent And Time Of Burning Of Flexible Plastics In Vertical Position
ASTM D1149-81	Test Method For Rubber Deterioration - Surface Ozone Cracking In A Chamber (Flat Specimen)
ASTM D1876-72	Peel Resistance Of Adhesives (T-Peel Test) Test Method For

(Application for copies should be addressed to American Society for Testing and Materials, 1916 Race Street, Philadelphia, PA 19103)

2.3 Order of precedence. In the event of a conflict between the text of this specification and the references cited herein, the text of this specification shall take precedence

3. REQUIREMENTS

3.1 First article. When specified, a sample shall be subjected to first article inspection (see 4.3 and 6 3).

3 2 Physical requirements The RAM shall have the physical requirements specified in 3 2 1 through 3.2 6

3.2 1 Size. Unless otherwise specified by the procuring activity, individual sheets of material (before cutting) shall nominally be 60 centimeters (cm) ±0 5 cm (24 inches (in.)) ±0 125 in square Thickness will vary according to design wavelength approximately 0.6 cm (0 25 in.) at the D (1 gigahertz (GHz) to 2 GHz) band down to 0.08 cm (0 03 in) at the K (20 GHz to 40 GHz) band Thickness shall not vary from design thickness by more than 0 01 cm (0 005 in) unless otherwise approved by the procuring activity

3 2.2 Flexibility. RAM flexibility shall depend on sheet thickness as specified in a through c

a D (1 GHz to 2 GHz) band sheets shall be capable of being cemented around a 2 5 cm (1 in) diameter metal tube

b E (2 GHz to 3 GHz) and F (3 GHz to 4 GHz) band sheets shall be capable of being cemented around a 1 3 cm (0.5 in) diameter metal tube

c G (4 GHz to 6 GHz) band, and thinner sheets, shall be capable of being completely folded double, under pressure, without cracking or breaking, thus demonstrating the capability to be cemented around a 90-degree angle

Class 1, RAM (see 1 2) is intended to be sufficiently flexible to cover a variety of regular surfaces Flexibility required for Class 3 RAM will be specified in the contract (see 1 2 and 6 2)

3 2 3 Power reflected Power reflected from the RAM for radiation at angles of incidence near normal (0 degrees to 30 degrees) from each sheet of RAM shall be at least 20 decibels (dB) down at any frequency within 5 percent above or below the chosen design frequency, and at least 17 dB down at any frequency from 5 percent to 10 percent above or below any chosen design frequency specified in the contract or purchase order. The absorption shall not be degraded by more than 5 dB after the RAM is exposed to the environmental conditions specified in 3 2 3 1 through 3 2 3 10 The RAM shall be unaffected by the incident radiation

3 2 3.1 Temperature. The RAM shall have an operating temperature range from -60°Celsius (C) (-76° Fahrenheit (F) to +80°C (+176°F) (see 4.7 2.1)

3 2 3 2 Solar radiation The RAM shall be unaffected (see 6 4 4) by the power reflected from solar radiation The RAM shall be capable of withstanding 5 years of exposure to ultraviolet light (see 4 7 2 2)

3 2 3 3 Salt fog. The RAM shall be unaffected after exposure to the salt fog test specified in 4 7 2 3

3.2 3.4 Absorbency. The RAM shall be unaffected by the exposure to moisture specified in 4.7.2.4.

3.2.3.5 Ozone. The RAM shall be unaffected by exposure to ozone as specified in 4.7.2.5.

3.2.3.6 Abrasion The RAM shall be unaffected by dust and sand. RAM used on a deck shall withstand normal foot traffic without premature wear.

3.2.3.7 Painting and paint stripping. The RAM shall be capable of accepting paint (or surface protection) for camouflage, or as part of routine painting, without degrading power reflected Painting and paint stripping shall not affect power reflected.

3.3.3.8 Cleaners and solvents. The RAM shall be immune to chemicals found on board ship, including those specified in 3.2.3.9. Routine cleaning of the RAM shall not affect power reflected.

3.2.3 9 Fuels and lubricants. The RAM shall be immune to fuels and lubricants used near it. If RAM immunity to all fuels is impossible, a protective coating shall be applied as specified in the individual equipment specification, to protect the RAM from kerosene, gasoline, and any other lubricant used on board ship. This includes antirust compounds, antiseize compounds, and waterproofing compounds. Once a suitable protective coating is chosen, the coating shall not affect power reflected. In the design cycle, changing the thickness of the RAM to include a protective paint may be necessary.

3.2.3.10 Composite environment. One RAM shall survive the combined effects of the tests specified in a through i, respectively·

a. 4.7.2.5
b. 4.7.2.1
c. 4.7.2.2
d. 4.7.2.3
e. 4.7.2.7
f. 4.7.2.8
g. 4.7.2.9
h. 4.7.2.6
i. 4.7.2.4

Upon completion of the tests specified in a through i, the RAM shall survive the test specified in 4.7.4 for power radiation without sign of surface deterioration. If the RAM fails, the failure mode shall be described in the final test report. When installed at sea, the RAM shall survive for five years.

3.2.4 Topside survivability (see 6.4.3). In addition to the capability to survive the environmental conditions specified in 3 2.3.1 through 3 2.3.10, a topside shipboard installation of RAM shall survive the physical hazards specified in 3.2.4.1 through 3.2.4.3.

3.2.4.1 Wind velocity. The RAM shall withstand the test specified in 4.7.3.1 for hurricane force winds without peeling or shredding.

3.2.4.2 Icing. The RAM shall withstand an iceload of 22 kilograms per square meter (kg/m^2) (4.5 pounds per square foot (psf)) (see 4.7.3.2).

3.2.4.3 Nuclear pressure blast. The RAM shall withstand a pressure wave caused by a nuclear blast without peeling or shredding. The values for the peak overpressure, the peak dynamic pressure, and pressure duration shall be as shown in FIGURE 1. The actual numbers for these values shall be specified in the individual equipment specification (see 6.2.1).

3.2.5 Maximum power rating. The RAM shall have a maximum power rating of at least 7500 watts per square meter (W/m^2).

3.2.6 Fungus. The RAM shall be resistant to fungi and shall not be adversely affected when tested in accordance with 4.7.5.

3.3 Cement requirements. RAM used to cut reflections from rails, stacks, and so forth, is cemented in place. The cement shall withstand the same environmental requirements as RAM. The cement shall have a T-peel strength in accordance with ASTM D1876-72 of 7 kilograms (kg) (15 pounds (lbs)) after conforming to each environmental requirement specified in 3.3.1 through 3.3.12.

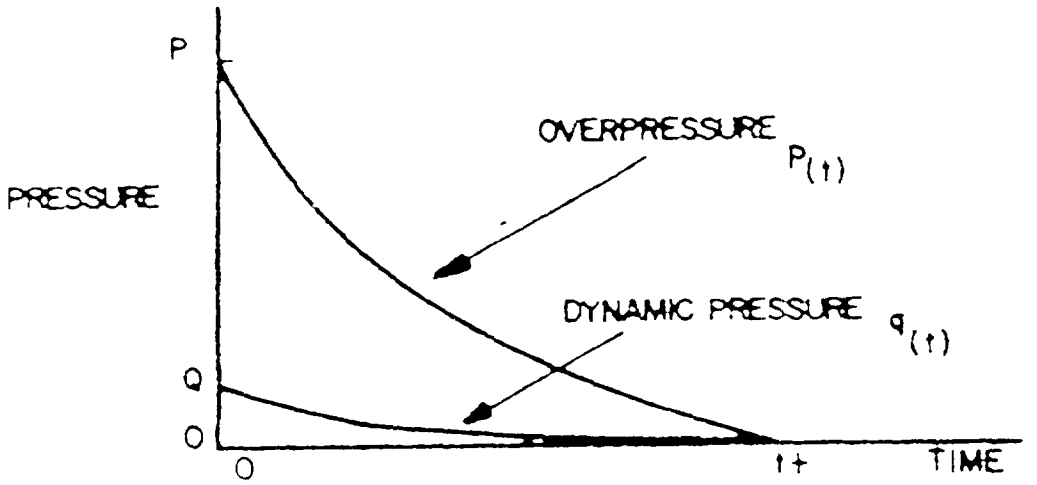

at $t = 0$, $p_{(t)} = P$, $q_{(t)} = Q$

for $t^{+} > t > 0$, $p_{(t)} = P\left(1 - \frac{t}{t^{+}}\right) e^{-\frac{t}{t^{+}}}$

$$q_{(t)} = Q\left(1 - \frac{t}{t^{+}}\right)^{2} e^{-\frac{2t}{t^{+}}}$$

Where

$P_{(t)}$ and $q_{(t)}$ are the pressures at any time (t) after arrival of shock front

P = Peak overpressure kg/m^2 (pounds per square inch (psi))

Q = Peak dynamic pressure kg/m^2 (psi)

t^{+} = Duration of positive phase in seconds

NOTE The overpressure and dynamic pressure both rise from zero to peak value at time zero (t = 0)

FIGURE 1 Nuclear pressure blast

3.3.1 Temperature. The cement shall be unaffected over a temperature range of -60°C (-76°F) +80°C (+176°F) (see 4.8.1).

3.3.2 Solar radiation. The cement shall be unaffected after exposure to the solar radiation test of 4.8.2.

3.3.3 Salt fog. The cement shall be unaffected after exposure to the salt fog test of 4.8.3.

3.3.4 Absorbency. The cement shall be unaffected by moisture (see 4.8.4).

3.3.5 Ozone. The cement shall be unaffected by exposure to ozone (see 4.8.5).

3.3.6 Abrasion. The cement shall be unaffected by exposure to dust or fine sand (see 4.8.6).

3.3.7 Painting and paint stripping. The cement shall be unaffected by painting and paint removers that are normally used on the RAM (see 4.8.1).

3.3.8 Cleaners and solvents. The cement shall be unaffected by the cleaners and solvents normally used to clean the RAM (see 4.8.8).

3.3.9 Fuels and lubricants. The cement shall be unaffected by the fuels and lubricants normally used where the RAM is mounted (see 4.8 9).

3.3.10 Composite environment. The cement shall be unaffected by the composite environment of 3.2.3.10 (see 4.8.10).

3.3.11 Topside survivability When used in the topside of a ship, the cement holding the RAM in place shall be capable of holding under the conditions specified in 3.3.11.1 through 3.3.11.3.

3.3.11.1 Wind. The cement shall hold under the conditions specified in 3 2.4.1.

3.3.11 2 Icing. The cement shall hold under an ice load of 22 kg/m^2 (4.5 psf) (see 3 2.4 2).

3.3.11 3 Nuclear pressure blast. If required by the individual equipment specification (see 6.2.1), the cement holding the RAM shall not fail under the nuclear pressure blast specified in 3.2.4.3.

3.3 12 Other requirements. In addition to conforming to the requirements specified in 3.3.1 through 3.3.11, the cement shall have a shelf-life of 3 months, a tack time of less than 5 minutes, and a setting time of less than one-half hour The cement shall not degrade the RAM nor shall it promote corrosion in the material to which the RAM is glued.

3.4 Safety. The use of RAM shall not present a hazard to personnel, nor shall cement, protective paints, or special cleaning solvents present a personnel hazard beyond those hazards normally encountered at sea.

3.4.1 Flammability. The RAM (with cement and any protection paint) shall not support combustion. When a flame is removed, the RAM shall self-extinguish. In any event, the RAM shall present no greater fire hazard than normally encountered on board ship (see 4.9.1).

3.4.2 Toxic fumes The Gases or fumes paragraph of MIL-STD-454, Requirement 1, shall apply.

3.4.3 Glass fibers and carcinogens. The design of the RAM (and associated mounting) shall conform to the Glass fibers and Carcinogens paragraphs of MIL-STD-454, Requirement 1.

3.5 Identification and marking. The individual equipment specifications shall specify definitive identification code numbers, including bulk material identification numbers, for each type of RAM. The RAM shall be marked Radar Absorbing Material and shall be marked with the frequency band.

3.5.1 Age control. The RAM shall be marked with cure date and the manufacturer's name in accordance with MIL-STD-1523. RAMs whose cure dates are unknown shall be rejected.

3.5.2 Installation markings. Installation markings shall be as specified in 3 5 2.1 through 3.5.2.3.

3.5.2.1 Class 1 RAM. Class 1 RAM, to be cemented over bulkheads (or rails, and so forth), shall be marked FRONT on the surface to be exposed. If the RAM has a reflective backing, the backing shall be marked DO NOT REMOVE and GLUE THIS SIDE DOWN. If the RAM has a protective sheet for shipping, the sheet(s) shall be marked REMOVE BEFORE INSTALLING. The front shall be marked RADAR ABSORBING MATERIAL, and shall be marked with the designated radar band. Since some materials have different absorptions for transmissions, polarized parallel or perpendicular to the extrusion direction, the top center shall be marked with an arrow to show which side shall be installed up. The front shall be marked NONMETALLIC PAINT ONLY. (After painting, all necessary markings shall be stenciled over the RAM, to preserve the RAM's identity.)

3.5.2.2 Class 2 RAM. RAM, used as a fence to keep a transmitter from illuminating a susceptible receiver, may have a rigid metal plate for reflective backing The backing shall be marked with the appropriate shipboard location, such as port or inboard The RAM shall be marked as specified in a through c:

a. Radar absorbing material
b With the designated band
c. Nonmetallic paint only

After painting, all necessary marking shall be stenciled over the RAM to preserve RAM identity.

3.5.2.3 Class 3 RAM. Class 3 RAM shall be marked with the part numbers that identify the RAM as part of the piece of equipment to which the RAM has been molded. The RAM shall be marked as specified in a through c·

a. Radar absorbing material
b. Nonmetallic paint only
c. With other markings to orient the RAM properly on the equipment to which the RAM belongs

3.6 Workmanship. The RAM shall have no voids or flaws caused by gas entrapment or improper mold loading. The RAM shall be free from inclusions of foreign material. Minor surface blemishes of 3 millimeters (0.125 in.) in diameter, or less, are acceptable, provided there are no more than eight such blemishes per sheet. Each sheet shall be clean and free of smudge, grease, and so forth All printing and marking shall be legible. The sheets shall be cut squarely. (For foam or mesh types of materials, so long as power reflected is not impaired, the size of voids is unimportant, except when a flaw will cause failure through stress concentration.)

4. QUALITY ASSURANCE PROVISIONS

4.1 Responsibility for inspection. Unless otherwise specified in the contract or purchase order, the contractor is responsible for the performance of all inspection requirements as specified herein. Except as otherwise specified in the contract or purchase order, the contractor may use his own or any other facilities suitable for the performance of the inspection requirements specified herein, unless disapproved by the Government. The Government reserves the right to perform any of the inspections set forth in the specification, where such inspections are deemed necessary to assure supplies and services conform to prescribed requirements.

4.1.1 Government verification. All quality assurance operations performed by the contractor will be subject to Government verification at any time. Verification will consist of, but is not limited to, a) surveillance of the operations to determine that practices, methods, and procedures of the written quality program are being properly applied, b) Government product inspection to measure quality of the product to be offered for acceptance, and c) Government inspection of delivered products to assure compliance with all inspection requirements of this specification Failure of the contractor to promptly correct deficiencies discovered by him, or of which he is notified, shall be cause for suspension of acceptance until corrective action has been taken or until conformance of the product to prescribed criteria has been demonstrated

4 1.2 Quality assurance terms and definitions. Quality assurance terms used in this specification shall be as defined in MIL-STD-109.

4.2 Classification of inspections. The inspection requirements specified herein are classified as specified in a through d:

a. First article inspection (see 4.3)
b. Quality conformance inspection (see 4.4)
   1. Production inspection (Group A) (see 4.4.1)
   2. Environmental inspection (Group C) (see 4.4.2)
c. Safety (see 4.9)
d. Inspection of preparation for delivery (see 4.11)

4 3 First article inspection The item(s) (see 6.4.1), designated for first article inspection (see 6.2), shall be subjected to all examinations and tests necessary to determine compliance with this specification and the individual equipment specification. Unless otherwise specified (see 6.2), first article inspection shall include the examinations and tests specified in TABLE I.

TABLE I. Examinations and tests

Examination or test	Requirement paragraph	Test paragraph	First article inspection	Quality conformance inspection	
				Group A	Group C
Material					
Flexibility	3 2 2	4.7.1	X	X	X
Power reflected	3.2.3	4 7.2	X	X	X
Temperature	3.2 3.1	4 7.2.1	X	X	
Solar radiation	3.2.3.2	4.7.2.2	X	X	
Salt fog	3.2.3.3	4 7.2.3	X	X	
Absorbency	3.2 3.4	4.7.2.4	X	X	
Ozone	3 2.3 5	4.7.2.5	X	X	
Abrasion	3.2.3 6	4.7.2 6	X	X	
Painting and paint stripping	3.2.3.7	4.7.2.7	X	X	
Cleaners and solvents	3.2.3.8	4.7.2 8	X	X	
Fuels and lubricants	3.2 3 9	4.7.2.9	X	X	
Composite environment	3.2 3.10	4.7.2.10	X	X	X
Topside survivability					
Wind velocity	3.2 4.1	4 7.3.1	X		X
Icing	3 2 4 2	4.7 3.2	X		X
Nuclear pressure blast	3 2.4 3	4.7 3.3	X		X
Maximum power rating	3 2 5	4 7.4	X		X
Fungus	3 2.6	4.7.5	X		X
Cement					
Temperature	3.3.1	4 8 1	X		
Solar radiation	3 3 2	4 8 2	X		
Salt fog	3 3 3	4.8 3	X		
Absorbency	3.3 4	4 8.4	X		
Ozone	3.3.5	4 8 5	X		
Abrasion	3.3 6	4.8.6	X		
Painting and paint stripping	3 3 7	4 8.7	X		
Cleaners and solvents	3 3.8	4.8 8	X		
Fuels and lubricants	3 3 9	4 8 9	X		
Composite environment	3 3.10	4 8.10	X		X
Topside survivability	3.3.11	4.8 11			
Wind	3 3.11.1	4.8 11	X		X
Icing	3 3.11.2	4.8 11	X		X
Nuclear pressure blast	3 3.11 3	4 8 11	X		X
Other requirements	3 3 12		X		
Safety	3 4	4 9			
Flammability	3 4 1	4 9 1			
Identification and marking	3 5		X		
Workmanship	3.6	4.10	X		

4.4 Quality conformance inspection. Quality conformance inspection shall be as specified in 4.4.1 through 4.4.2.2.

4.4.1 Production inspection (Group A). Production inspection shall be conducted on every item offered for delivery. The inspection shall comprise such examination and testing as will prove the workmanship and reveal the omissions and errors of the production process, such as tests which detect hidden defects of material. Production inspection shall consist of the examinations and tests specified in Group A of TABLE I.

4.4.2 Environmental inspection (Group C). Environmental inspection shall be performed on items which have been subjected to, and have passed, production inspection. Environmental inspection shall encompass environmental tests to prove the durability of the materials, and tests of the effects of changes of environment (such as extremes of temperature and effect of salt air). Environmental inspection shall include the examinations and tests shown in Group C of TABLE I.

4.4.2 1 Nonconforming environmental sample units. If a sample unit fails the inspection specified in 4.4.2, the contractor shall immediately investigate the cause of failure, and shall report to the quality assurance representative (QAR) the results thereof and details of action taken to correct units of product which were manufactured under the same conditions, with the same materials, processes, and so forth. If the QAR does not consider that the corrective action will enable the product to conform to specified requirements, or if the contractor cannot determine the cause of failure, the matter shall be referred to the contracting officer.

4.4.2.2 Reinspection of conforming environmental sample units. Unless otherwise specified (see 6.2), sample units which have been subjected to, and passed, environmental tests may be accepted on the contract provided they are resubjected to, and pass, production inspection after repair of all damage.

4 5 Test chambers and apparatus. Test facilities' chambers and apparatus used in conducting the tests specified herein shall be capable of conforming to all the applicable test conditions, as required by the test methods specified in 4 7.

4.6 Failure and rejection criteria Failure of the RAM occurs when power reflected exceeds the limits specified in 3.2 3. Failure of the cement occurs when the cement fails the T-peel test. Failure of 25 percent or more of an environmental survivability test sample shall be cause for rejecting RAM produced in the same production lot as the sample Unless otherwise specified (see 6 2 1), failure of one RAM to 25 percent of a sample shall be cause for rejection of the individual RAM produced in that production lot which failed.

4.7 Test methods. The test methods shall be as specified in 4.7 1 through 4.9 1.4

4.7.1 Flexibility test. A sample of the RAM shall be cemented around the appropriate size tube (or angle) to verify that the RAM conforms to the requirements specified in 3.2.2

4.7 2 Power reflected. For each of the environmental conditions specified in 4 7 2.1 through 4.7 2 10, the RAM shall be subjected to the arch power reflected test specified in the APPENDIX The RAM shall be tested at the design frequency and within 5 percent on either side of the design frequency. The RAM shall be tested with the incident beam normal to the surface and within 30 degrees away from the normal

4 7 2 1 Temperature. The RAM shall be subjected to Method 501 2, Procedure II of MIL-STD-810 for the high temperature test The maximum temperature shall be increased to +80°C (+176°F) The RAM shall then be subjected to Method 502.1 of MIL-STD-810 for the low temperature test. The minimum temperature shall be lowered to -60°C (-76°F)

4.7.2.2 Solar radiation The RAM shall be subjected to Method 505.2, Procedure II of MIL-STD-810 for the solar radiation tests After completion of the tests, the RAM shall be subjected to the power reflected test specified in 4 7 2

4 7 2 3 Salt fog. The RAM shall be subjected to Method 509.2 of MIL-STD-810 to determine resistance to a salt fog atmosphere. A test resulting in a discolored surface of the RAM, with the power reflected unaffected, is acceptable.

4 7.2 4 Absorbency. The RAM shall be tested for absorbency The RAM shall be weighed, and then immersed in water that is pressurized to a depth of 150 meters (m) (500 feet (ft)) for 24 hours at 23°C (73°F). The next day, the RAM shall be removed, and without wiping it off, shall be weighed The RAM shall not have absorbed water. The RAM shall then be subjected to the power reflected test specified in 4 7.2

4.7.2.5 Ozone. The RAM shall be subjected to the test methods specified in ASTM D1149-81 and ASTM D518-74. At the end of the tests, the RAM shall be examined for cracking. Cracks which do not affect the power reflected are acceptable.

4.7.2.6 Abrasion. The RAM shall be subjected to Method 510 2 of MIL-STD-810 After completion of the test, the RAM shall be subjected to the power reflected test specified in 4.7.2.

4.7.2.7 Painting and paint stripping. The procedures specified in a through e shall be performed to ensure that the RAM can be painted, stripped, and repainted

a. The RAM shall be painted in accordance with the manufacturer's instructions, and after the paint has dried, the paint shall be removed in accordance with manufacturer's instructions
b. The RAM shall be immersed in a 20 percent (by weight) salt solution for 1 hour and then washed in running water.
c. The RAM shall be immersed in a 5 percent (by weight) solution of sulphuric acid for 30 minutes, and then washed off in running water Allow the surface to dry
d. Repeat steps a through c twice
e. The RAM shall be subjected to the power reflected test specified in 4.7.2 and shall be unaffected.

4.7 2.8 Cleaners and solvents. The RAM shall be capable of withstanding cleaners, solvents, and miscellaneous chemicals The individual equipment specification shall identify what chemicals will be used to clean the RAM, what other chemicals the RAM will be exposed to, and how much degradation over the maintenance cycle is acceptable. The individual equipment specification shall then simulate these chemical hazards over the life cycle of the RAM to ensure that power reflected will not be degraded.

4.7.2.9 Fuels and lubricants. One RAM shall be dipped into gasoline and one RAM shall be dipped into kerosene, and the power reflected of each RAM shall be unaffected.

4.7.2.10 Composite environment. The RAM shall be subjected to the environmental criteria specified in 3.2.3.1 through 3.2.3.10 in the order specified in a through i:

a. Ozone
b. Temperature
c. Solar radiation
d. Salt fog
e. Painting and paint stripping
f. Cleaners and solvents
g. Fuels and lubricants
h. Abrasion
i. Absorbency

If the RAM fails the power reflected test, the contractor shall re-evaluate the choice of material and the protective paint.

4.7.3 Topside survivability. Topside survivability shall be as specified in 4.7.3.1 through 4.7.3.3.

4.7.3.1 Wind. The test procedure specified in a through e shall be performed on the RAM to evaluate the holding ability of the RAM and the cement during a severe hurricane.

a. Apply the RAM to a flat metal surface and cement in accordance with the manufacturer's instructions. The metal shall be wide enough to fill the wind tunnel (to produce a two-dimensional flow), and shall be slightly longer in the chord.
b When the cement has dried in accordance with the manufacturer's instructions, place the RAM in a wind tunnel mounted at an angle of attack between 30 degrees and 45 degrees.
c. At 23°C (73°F) test the RAM in 15 meters per second (m/s) (75 knots (kn)) wind for 15 minutes. Remove the RAM and examine for shredding and peeling.
d. Return the RAM to the wind tunnel, and reinstall the RAM exactly as before. Raise the wind to 25 m/s (100 kn) for 5 minutes. Remove the RAM and examine the edges for signs of peeling again.
e. Apply the T-peel test specified in 4.7 The RAM shall have a T-peel strength of 7 newton-force.

For Class 2 and Class 3 RAM, a wind tunnel test shall simulate the actual conditions and ensure that the RAM will not be blown off equipment, which could cause foreign object damage.

4.7.3.2 Icing. The RAM shall be coated with ice then sprayed with hot salt water or steam until the ice is removed. The surface shall be inspected for signs of cracking or peeling. The RAM shall be refreezed and once again sprayed with hot salt water or steam, and the surface inspected once more. Repeat a total of five times. At the end of the testing the T-peel test specified in 4.8 shall be applied.

4.7.3.3 Nuclear pressure blast. The RAM shall be tested to determine conformance to the requirements specified in 3 2.4.3, as specified in the individual equipment specification (see 6.2.1).

4.7.4 Maximum power rating. A sample of RAM shall be subjected to the arch test specified in the APPENDIX. The sample shall be at least 5λ on a side, where λ is the design wavelength. The power level shall be high enough to represent 7500 W/m^2.

4.7.5 Fungus. The RAM shall be subjected to the fungus test specified in Method 508.3 of MIL-STD-810.

4.8 Cement tests. The cement tests shall be performed on the same RAM used to test the RAM. The T-peel method specified in ASTM D1876-72 shall be used to verify that each RAM still has a T-peel strength of 7 kg (15 lbs) after completion of each of the tests specified in 4.8.1 through 4.8.11

4.8.1 Temperature. The temperature tests shall be performed as specified in 4.7.2.1.

4.8.2 Solar radiation. The solar radiation test shall be performed as specified in 4.7.2.2. This test shall be performed to verify that ultraviolet radiation has not weakened the RAM severely.

4.8.3 Salt fog The salt fog test shall be performed as specified in 4.7.2.3.

4.8.4 Absorbency. The absorbency test shall be performed as specified in 4.7.2.4.

4.8.5 Ozone The ozone test shall be performed as specified in 4.7.2.5.

4.8.6 Abrasion. The RAM used in the abrasion test shall be subjected to the T-peel test. This test shall be performed to verify that the RAM has not weakened.

4.8.7 Painting and paint stripping The painting and paint stripping test shall be performed as specified in 4.7.2.7.

4.8.8 Cleaners and solvents. The cleaners and solvents test shall be performed as specified in 4.7.2 8.

4.8.9 Fuels and lubricants The fuels and lubricants test shall be performed as specified in 4.7.2.9.

4.8.10 Composite environment. The composite environment test shall be performed as specified in 4.7.2.10.

4.8 11 Topside survivability. The topside survivability tests shall be performed as specified in 4.7 3.1 through 4.7.3.3.

4.9 Safety tests. The safety tests shall be as specified in 4.9.1 through 4.9.1 4.

4.9.1 Flammability. The RAM shall be subjected to the test method specified in ASTM D568-77 to determine the flammability The procedure shall be modified as specified in 4.9.1.1 through 4.9 1.4

4.9.1 1 Timing. Timing shall consist of the three phases specified in a through c:

a. Time to start burning
b. Time for the RAM to burn upwards the distance specified in ASTM D568-77
c Time to self-extinguish

Times a and b shall be performed on all specimens. Time c shall be determined for 50 percent of the samples by removing the bunsen burner after the RAM has started to burn, but no later than 15 seconds after the burner has been placed under the sample.

4.9.1.2 Burning. The average rate of burning and the extent of burning shall be determined as specified in ASTM D568-77.

4.9.1.3 Self-extinguishing. Whether or not the RAM self-extinguishes, including the time involved, and the cause of self-extinguishing (dripping, smothering, and so forth) shall be determined.

4.9.1.4 Flammability criteria. This test shall not normally be considered a rejection criterion, unless the RAM is a fire hazard which makes the RAM unacceptable for shipboard use (explosive combustibility, difficulty in extinguishing, and so forth).

4.10 Workmanship. The RAM shall be examined for workmanship to determine conformance to the requirements of 3.6.

4 11 Inspection of preparation for delivery. Inspection shall be performed to ensure conformance with the requirements of Section 5.

5. PACKAGING

(The preparation for delivery requirements specified herein apply only for direct Government procurements. Preparation for delivery requirements of referenced documents listed in Section 2 do not apply unless specifically stated in the contract. Preparation for delivery requirements for products procured by contractors shall be specified in the individual order.)

5 1 Preservation, packaging, packing, and marking. Unless otherwise specified herein, preparation for delivery shall be in accordance with the applicable levels of preservation, packaging, packing, and marking specified in MIL-E-17555 (see 6 2).

6. NOTES

6.1 Intended use The RAM covered by this specification is intended for use onboard surface ships.

6.2 Ordering data. Procurement documents should specify:

a. Title, number, and date of this specification
b. Class required (see 1.2)
c. Flexibility for Class 3 RAM (see 3 2.2)
d. Operating frequency, bandwidth, and attenuation
e. Number of first article samples to be submitted (see 4.3)
f When reinspected environmental sample units may not be accepted (see 4 4 2.2)
g Levels of preservation, packaging, packing, and marking (see 5.1)

6.2.1 Guidance for individual equipment specifications Since this specification is general in scope, the items listed in a through i should be considered in preparing the specification.

a Color, specifying the applicable color number
b. Sheet size, if other than nominal 60 cm (24 in.) size
c. Operating frequency, bandwidth, and angle of incidence (from the offending broadcaster)
d. Power reflected test method, if other than the arch test. Whatever test is used, the test shall yield results which are easily translatable to arch results. There should also be a power reflected test to ensure that the RAM works where and how the RAM is used. For example, if RAM is molded into a special shape (to cut down sidelobes) on an antenna, there should be a test to ensure that the RAM gives, for example, 10 dB attenuation to the sidelobes.
e. Given then that a procurement specification may not purchase sheets of RAM, but that the RAM may be molded into various shapes or cemented over rails rather than to flat surfaces, the RAM should survive all environmental hazards where it is used, as well as attenuate signals as desired.
f RAM may be affected by various chemicals such as solvents, fuels, cleaners, and paints. In that case, the procuring activity should specify paints and cleaning methods that will not degrade the RAM, and any other special precautions.
g Failure and rejection criteria if different from that specified in 4.6
h. Safety considerations
i Inspection requirements

6.2 2 Data requirements. When this specification is used in an acquisition which incorporates a DD Form 1423, Contract Data Requirement List (CDRL), the data requirements identified below shall be developed as specified by an approved Data Item Description (DD Form 1664) and delivered in accordance with the approved CDRL incorporated into the contract. When the provisions of the DoD FAR clause on data requirements (currently DoD FAR Supplement 52 227-7031) are invoked and the DD Form 1423 is not used, the data specified below shall be delivered by the contractor in accordance with the contract or purchase order requirements Deliverable data required by this standard is cited in the following paragraphs.

	Paragraph	Data requirement title	Applicable DID
a.	3.1	First Article Inspection Report	DI-T-4902

(Copies of DIDs required by contractors in connection with specific acquisition functions should be obtained from the Naval Publications and Forms Center or as directed by the contracting officer)

6.3 First article. When a first article is required it shall be tested and approved under the appropriate provisions of 52.209-3 of the Federal Acquisition Regulations The first article should be a first production item. The first article items should be as specified in the contract The contracting officer should include specific instructions in all procurement instruments, regarding arrangements for examinations, tests, and approval of the first article.

6.4 Definitions. Definitions of terms used in this specification are given in 6 4 1 through 6.4 4.

6.4.1 Item (test item). The RAM attached with cement to a flat metal surface no larger than 60 cm by 60 cm (24 in. by 24 in) but at least 5 on a side (see APPENDIX) The RAM, reflective backing, cement, and any protective paint shall be tested together.

6.4.2 RAM. Acronym for radar absorbing material. These materials are generally elastomers such as isoprene, neoprene, silicone, or urethane. The materials have been manufactured so that they appear electrically one-fourth of a wavelength deep, so that a beam (reflecting off a conductive backing) emerges inverted and cancels the incident beam.

6 4.3 Survivability. The ability of the RAM to endure the environmental test to which the RAM will be subjected and be unimpaired in the ability to function as desired.

6.4.4 Unaffected. Not degraded in ability to perform as designed below the tolerances allowed in the applicable requirement paragraph.

6.5 Changes from previous issue. Asterisks are not used in this revision to identify changes with respect to the previous issue, due to the extensiveness of the changes.

Custodian:
Navy-EC

Review activities:
Navy-AS

Preparing activity.
NAVY-EC

(Project No EMCS-N106)

PROCEDURE FOR ARCH TEST

10. SCOPE

10.1 Scope. This APPENDIX covers the theory of operation, test procedures, and test equipment required to measure microwave absorber performance using the arch test method.

20 APPLICABLE DOCUMENTS

20.1 Other publications. The following document forms a part of this APPENDIX to the extent specified herein Unless otherwise indicated, the issue in effect on date of invitation for bids or request for proposal shall apply.

UNIVERSITY OF MICHIGAN

Report 5391-1-F A Study of VHF Absorbers And Anechoic Rooms

(Application for copies should be addressed to the Defense Technical Information Center, Cameron Station, Alexandria, VA 22314)

30 THEORY OF OPERATION

30.1 Introduction. A brief, theoretical, description of the measurements taken with the arch test method, and how the measurements are performed is presented in 30 1 through 30.2.1.3. The mathematics go into greater depth than necessary for the technician to perform the test procedures, but clarify the reasoning behind the test procedures A more detailed description is contained in the University of Michigan Report 5391-1-F.

30 2 Theory. In the test shown in FIGURE 2, $|E_p|$ represents the amplitude of the plane wave passing from the transmit antenna to the receive antenna via the reference plate. At any given time, t, the phase of this wave is constant and the field magnitude may be expressed in phasor notation as:

$$E_p^* = |E_p| e^{J(\theta+wt)},$$

where the asterisk denotes a complex quantity.

As shown in FIGURE 2, a second path exists for the energy to reach the receive antenna. This path is denoted as the coupling path $|E_c|$. At any given time, t, phase of this wave is constant and the field magnitude may be expressed in phasor notation as:

$$E_c^* = |E_c| e^{J(\phi+wt)}.$$

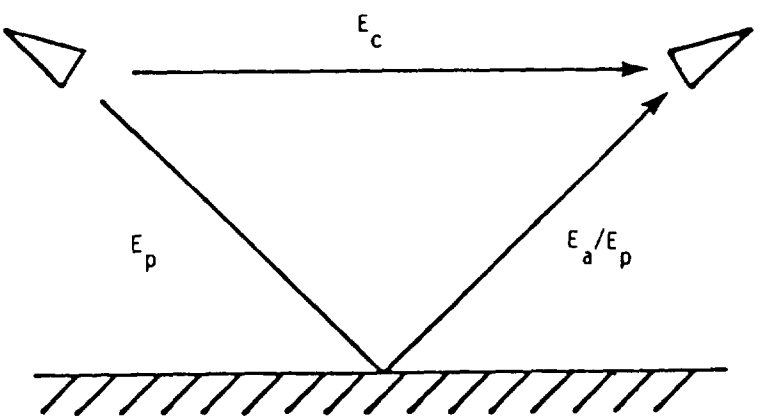

FIGURE 2 Electromagnetic model.

The magnitude of the total field at the receive antenna is then given by

$$E_t^* = E_p^* + E_c^* = |E_p| e^{J(\theta+wt)} \; |E_c| e^{J(\emptyset+wt)}.$$

When the absorber is placed on the plate, the total field is changed since E_p becomes E_a where E_a is equal to

$$E_a^* = |AE_p| e^{J(\theta+a+wt)},$$

where A represents the amplitude loss and a is the change in the phase due to the change in path length through the material.

Thus E_t^* now becomes

$$E_t^* = E_a^* + E_c^* = |AE_p| e^{J(\theta+a+wt)} + |E_c| e^{J(\emptyset+wt)}.$$

If one can neglect E_c^*, the measured loss is a simple ratio of E_p and E_a, which is the common assumption. However, depending on the pattern geometry and angles at which the illuminating antennas are set, E_c becomes a significant term in the total field received at the receive antenna.

30.2 1 Possible error in measured reflected levels. In order to appreciate the effect on the uncertainty of the measurements caused by the coupling between the antennas, see the graph in FIGURE 3. This represents the uncertainty that occurs when two coherent signals of varying magnitude add together destructively and constructively. In connnection with FIGURE 3, three cases are provided for examination:

30.2.1.1 Case I. Assumption Desired measurement uncertainty to be within ±2 dB (see FIGURE 3) The unwanted signal (coupling) needs to be 19 dB below that of the desired signal. Thus, for an absorbtion loss of 40 dB, the coupling between the antennas should be held below 59 dB. This represents a great deal of suppression which, in general, is difficult to achieve in practice since the antennas are located close together.

30.2 1 2 Case II. Assumption Coupling and measurement paths result in equal amplitude signals at the receive antenna (see FIGURE 3) It becomes evident that this represents an uncertainty which can range from +6 dB to $-\infty$. Thus, it is very important that the test engineer know the relative signal levels that exist between the measurement path and the coupling path. This can be accomplished several ways. The most common method is to change the path length through the absorber by moving the test table up and down. If the path is changed by at least one-half wavelength, one can assume that the signal variation observed is due to the two signals varying in and out of phase One disadvantage is that this changes the focal relation of the antennas with the reference plate The effect of this change on the measurements is difficult to determine A second method involves moving the receive antenna through an arc about the nominal angle of incidence. This changes the path length of the coupling path, thus changing the phase relationship between the two signals This method is quite useful as the signal levels change slowly across the peak of the pattern and the antenna to plate relationship is constant.

30.2 1 3 Case III. Assumption The coupling signal amplitude is greater than the absorber signal level This is a very common problem. Since measurement equipment is voltage summing, it is not obvious to a test technician unless an independent measurement is made of the antenna relationship Thus, an erroneous conclusion can be made if the technician assumes that the meter reads the absorber loss directly. This also represents a limiting case on arch measurements, which do not have a means of changing one of the path length relationships, so that the signal level relationships can be resolved. From the above considerations, and those that follow, comes an arch design which permits the movement of one of the antennas about the axis through the center of the reference plate. This makes it possible to set the arch up properly for fixed production testing, as well as thoroughly examining absorber performance in detail. FIGURE 4 shows the construction basics of such an arch. Where movement of both antennas is desirable, see FIGURE 5.

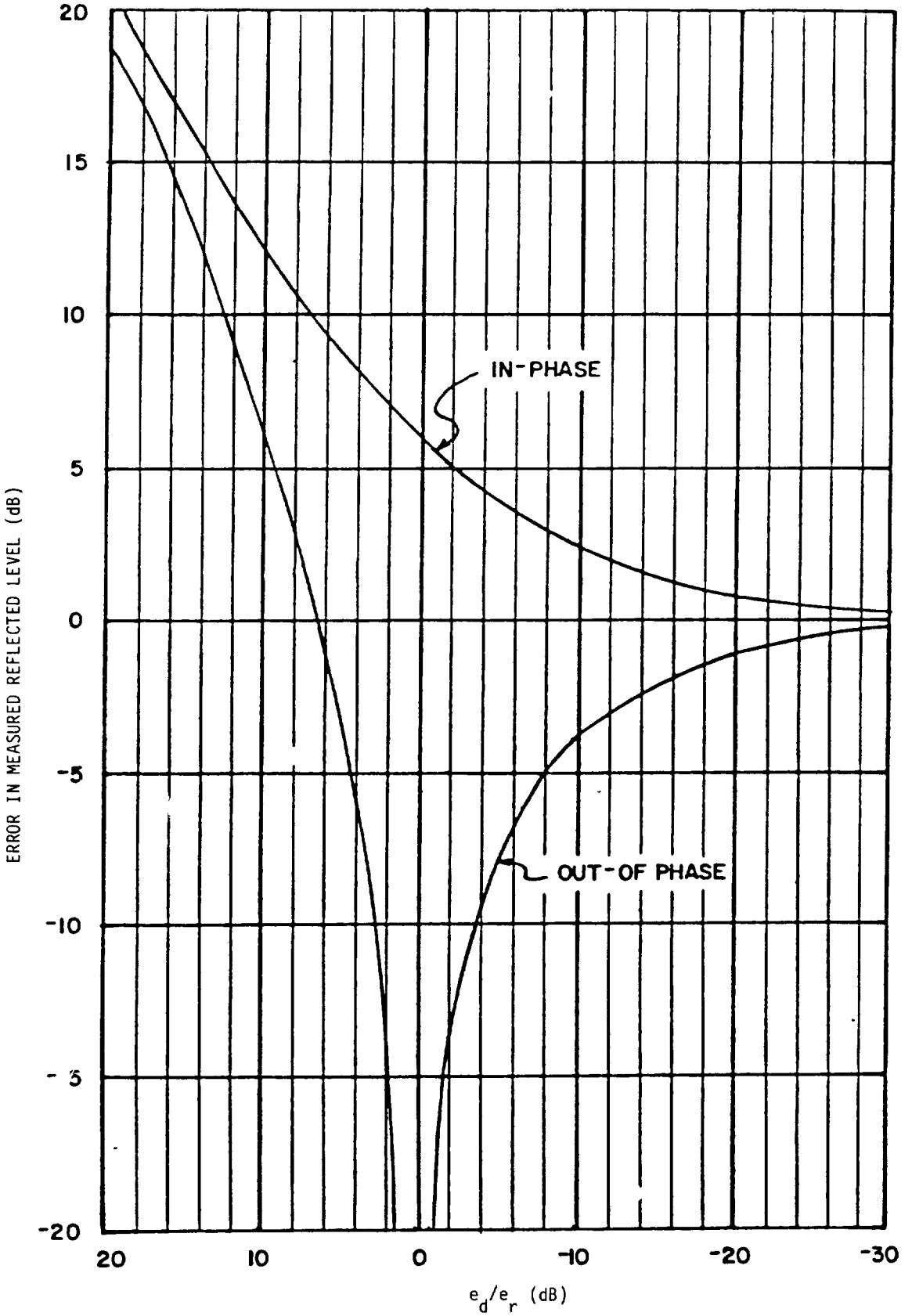

FIGURE 3 Possible error in measured reflected levels due to coherent signals

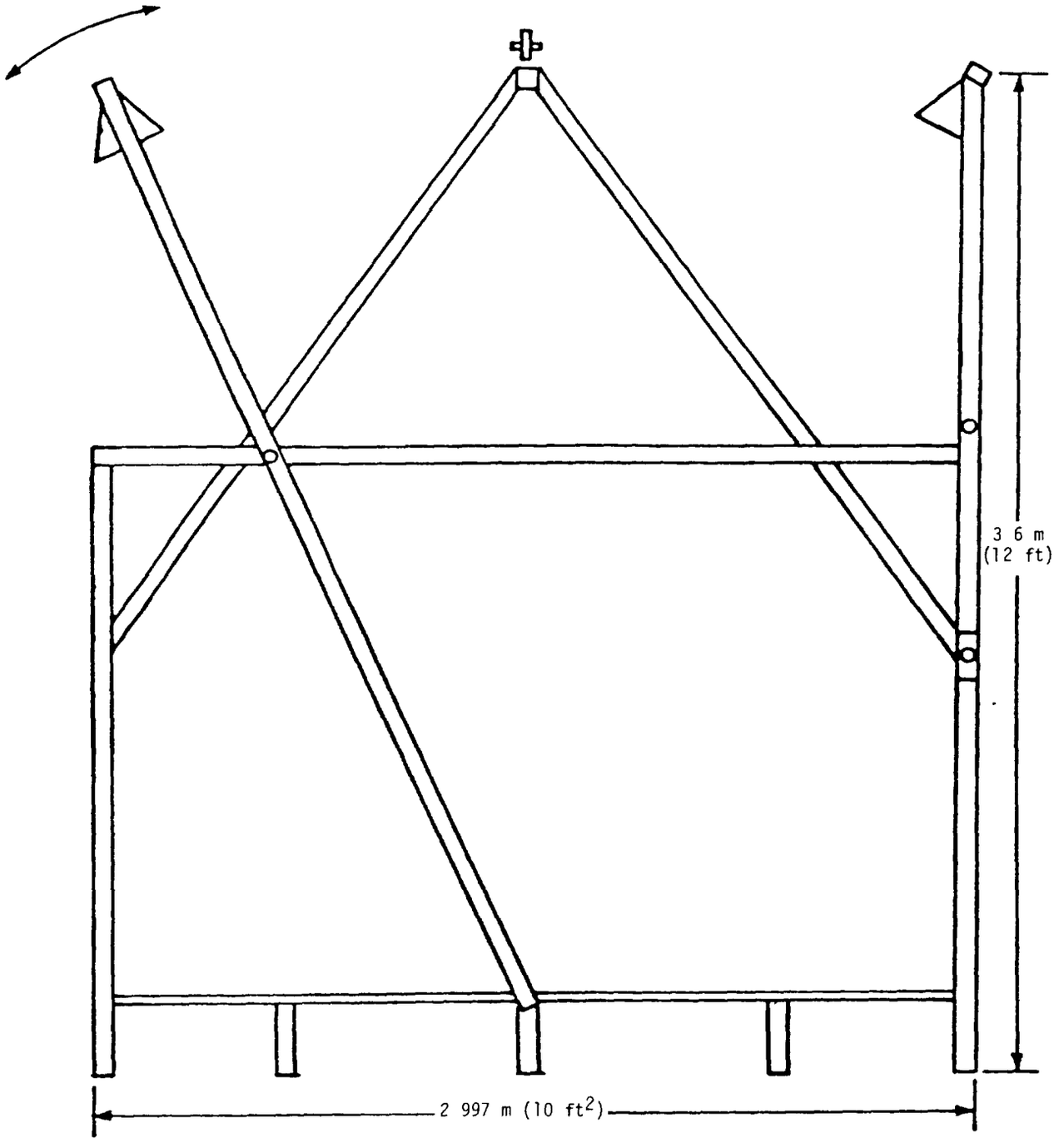

FIGURE 4 C-E band arch test system

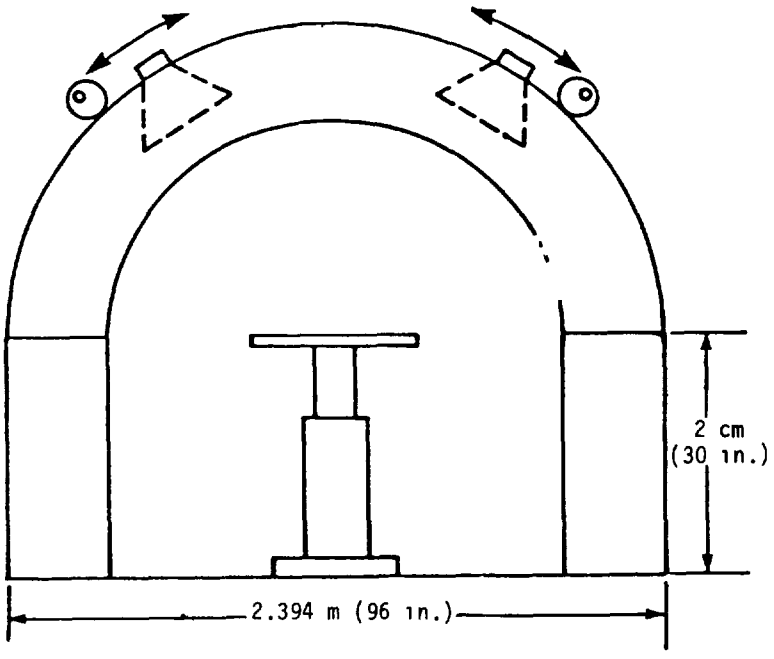

FIGURE 5. H band arch test system.

Once the basic electromagnetic equations for the arch are determined, certain other considerations apply This is based on the principle that the size of the sample under test be of sufficient size to minimize uncertainties associated with edge effects. The University of Michigan Report 5391-1-F considered this problem and recommends that the size be at least 5λ on a side This is basically true, but the antenna path length is a factor also. An electromagnetic model is described to help explain this relationship. The reflection of electromagnetic waves which illuminate typical surfaces is conveniently studied in terms of zones of constant phase, or Fresnel zones, on the surface. For transmit and receive antenna heights of h_t and h_r, with a separation R between the bases of the transmit antenna and the receive antenna, the shortest path between the transmit and receive points via the test surface is:

$$R_{ro} = \left[R^2+(h_r+h_t)^2\right]^{1/2}.$$

For vanishing small wavelengths, this path would define the point of specular reflection (the center of the region of constant phase) at which the grazing angle is given by

$$\psi = \tan^{-1}\left[(h_r+h_t)\right]/R \quad .$$

If a coordinate reference as shown in FIGURE 6 is established, the path length via any other point (o, y, z) on the surface is written:

$$R_r = \left[(h_t{}^2+y^2+z^2\right]^{1/2} + \left[h_r{}^2+y^2+(R-z)^2\right]^{1/2}.$$

Since $R_r > R_{ro}$, the phase of a ray traveling along R_r lags that of the ray along R_{ro} by radians, where

$$\Delta\phi = \frac{2\pi}{\lambda}(R_r - R_{ro}).$$

By definition, the locus of points (o, y_1, z_1) for which:

$$\Delta\phi_1 = N \quad , N = 1, 2, 3,$$

or correspondingly.

$$R_r1 - R_{ro} = \frac{N\lambda}{2}$$

determines the outer boundary of the Nth Fresnel zone. The inner boundary of the Nth zone is given by:

$$R_r1 - R_{ro} = (N - 1) \quad \frac{\lambda}{2} \quad .$$

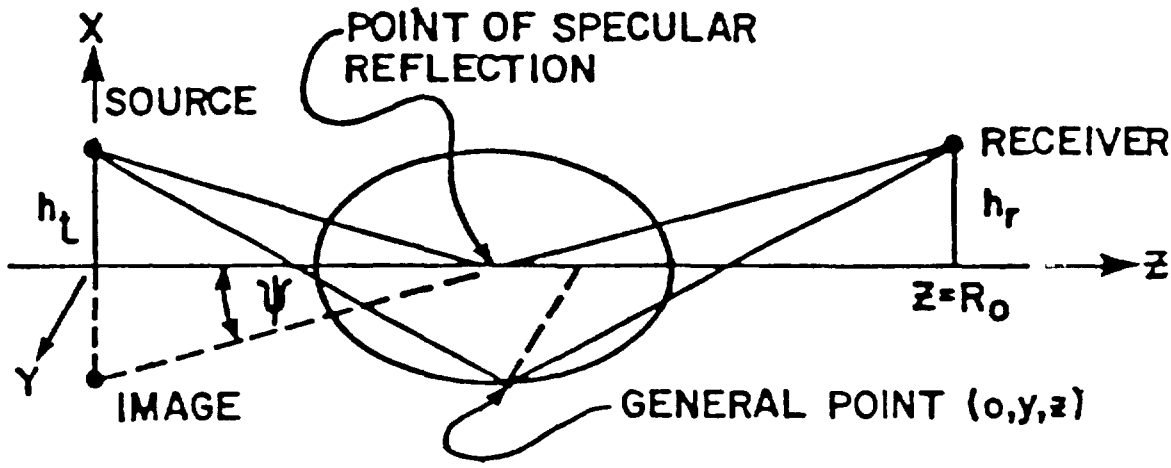

FIGURE 6. Sketch for Fresnel zone boundary on a planar test surface

The definitions are such that the energy arriving at the receive point from the outer bound of the Fresnel zone lags in phase by π radians the energy arriving from the inner bound of the zone

In arch design problems, the pertinent parameters of a given Fresnel zone are the length and width of the outer bound. These parameters can be calculated from 3 11, which is rewritten in terms of the arch dimensions and coordinates as

$$\left[h_t^2+y^2+z^2\right]^{1/2} + \left[h_r^2+y^2 + (R-z)^2\right]^{1/2} - \left[R^2+(h_r+h_t)^2\right]^{1/2} = \frac{N\lambda}{2}$$

This expression shows that the successive outer bounds of the Fresnel zones on a plane surface describe a set of expanding ellipses whose major axis lies along the longitudinal arch axis. The algebraic manipulations for solving the desired parameters are simplified by the following substitutions.

$$F_1 = \frac{N\lambda}{(2R + \sec\psi)}$$

$$F_2 = \frac{(h_r^2 - h_t^2)}{(F_1^2-1)\,R^2}$$

$$F_3 = \frac{(h_r^2 - h_t^2)}{(F_1^2-1)\,R^2}$$

It can be shown that the following expressions result for the parameters of the outer-bound of the Nth zone, where the center is measured from the base of the source power.

Length: $L_n = RF_1(1 + F_2^2 - 2F_3)^{1/2}$

Width. $W_n = R\left[(F_1^2 - 1)\,(1 + F_2^2 - 2F_3)\right]^{1/2}.$

Since practical anechoic surfaces are not true planes, and the wavelengths at microwave frequencies do not satisfy the conditions of geometrical optics, these expressions are inexact in practice This does not, however, destroy the utility of these expressions in formulating basic arch design parameters. The University of Michigan Report 5391-1-F specifies that the sample size should be at least large enough to cover one Fresnel zone. As a practical matter, at least two Fresnel zones should be used to obtain a sample of sufficient size so that error due to sample size is within acceptable limits.

Other considerations are the antenna sizes and the distance between the antennas. Researchers at the University of Michigan recommend that the size of the antennas be such that the edges of the sample under test are illuminated with energy which is somewhat less than at the center. This is to reduce the edge effect which can introduce errors in the measurement. As the reflection performance increases a greater illumination taper should be used. A practical design criterion is an edge illumination of -10 dB to -20 dB.

The University of Michigan recommends that a far field separation distance from the metal plate be used The distance $\geq \frac{2D^2}{\lambda}$ is a useful guideline. Antenna sizes and separation distances are specified in TABLE II. There should be a trade off between antenna size and separation distance.

40. TEST REQUIREMENTS

40.1 Test equipment arrangement. The test equipment arrangement shown in FIGURE 7 is recommended because of the amount of reflection loss to be measured The video detection technique is suitable for losses up to 40 dB With RF attenuator substitution, that technique can be extended to about 55 dB with common laboratory sources TABLE II specifies the dimensional data for the arrangement shown in FIGURE 7 TABLE III specifies the equipment requirements and a typical, or equivalent listing of the required equipment.

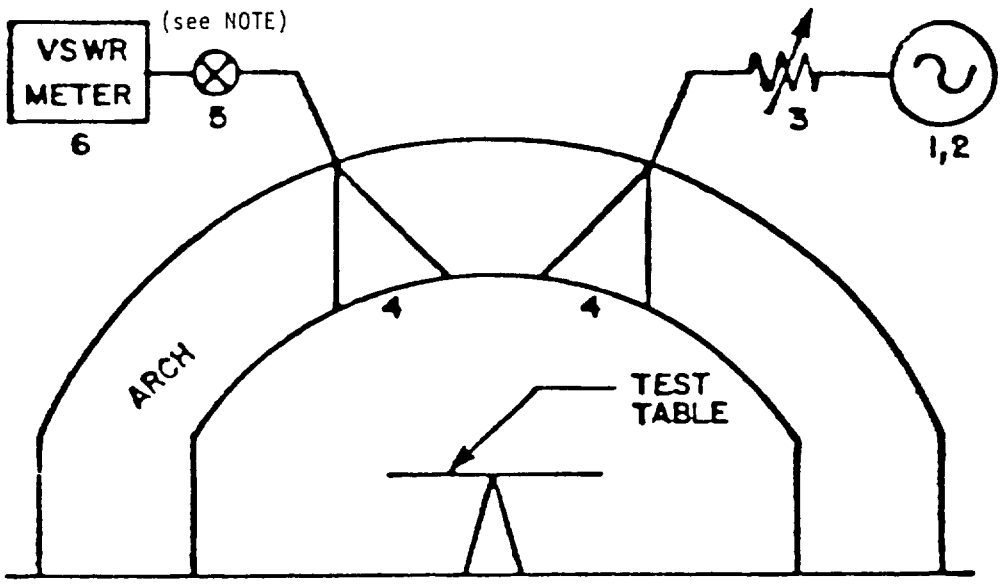

Note Voltage-standing-wave-ratio.

FIGURE 7 Video detector equipment, arch arrangement

TABLE II Antenna sign and separation distances

Band	F[1/] (GHz)	λ (cm)	λ (in)	Antenna size (cm)	Antenna size (in)	Beamwidth degrees	10 λ (cm)	10 λ (in.)	$\frac{2D^2}{\lambda}$ (m)	$\frac{2D^2}{\lambda}$ (in.)	Minimum antenna plate distance (m)	(ft)
D	1 1	27.2	10 7	56 x 41	22 x 16	30	272	107	2.29	90	1 16	3 8
D	2.0	15.0	5 90	56 x 41	22 x 16	30	150	59 0	4.17	164	2 08	6.84
E	4	7 49	2 95	18 x 25	7 x 10	28	74 9	29 5	1.55	61	0.78	2.55
H	8	3.76	1 48	30 x 20	11 x 8	12	37.6	14 8	2 90	114	2.20	7.27
I	10	3.00	1 18	20 x 15	8 x 6	12	30 0	11.8	2.52	99	1.26	4 13
J	12	2.50	0.984	20 x 15	8 x 6	12	25.0	9 84	3.02	119	1.51	4 96
J	18	1 44	0 565	15 x 13	6 x 5	9	14.4	5.65	2 74	108	1.37	4.50

1/ Frequency

TABLE III Video detector equipment

Item no.	Description or function	Model no , or equivalent	Range requirements	Comments
1	Signal source	HP 1/ 8690B	Power supply 3/ and Controls 1 kHz modulation	
2	Oscillator, backward wave or solid-state	HP 8690 series	2 GHz to 18 GHz	Plug-in units as required
3	Attenuator, series, variable	HP 382A series	0 dB to 50 dB 2 GHz to 18 GHz	
4	Antenna, horn, standard gain	SA 2/ 12-8		
5	Detector, video	HP 420A		
6	Meter	HP 415E	70 dB in 10 dB and 2 dB steps	Tuned amplifier or voltmeter, or both, with dB scales

1/ Hewlett Packard
2/ Signal Analysis Division, Hewlett Packard
3/ Kilohertz

40 2 Test procedure The test procedure shall be conducted as specified in 40 2.1 and 40 2 2.

40.2.1 Initial set-up procedure To ensure that the coupling level is acceptable, or is known, the procedure in a through c shall be followed.

a. The antennas shall be set near normal incidence (less than 25 degrees from the normal).

b. The reference plate shall be aligned for proper focus

c After the average level is determined, the receive antenna shall be slowly moved through an arc ±10 degrees about the normal, with an absorber of known performance on the table The peak-to-peak (p-p) amplitude variation (in dB) shall be determined on the meter. (The meter is a low noise, 1000 kHz tuned amplifier and voltmeter calibrated in dB and standing-wave ratio) From these readings, the coupling level and absorption level shall be determined in accordance with Section 30. The difference between the reference reading without the absorber and the test reading with the absorber should indicate the attenuation of the material. If the nominal expected attenuation is obtained, this verifies that the direct coupling factor is low and that the lower portion of the error curve of FIGURE 2 applies. The antenna coupling factor shall be adjusted by changing the angle of incidence and absorber levels between the test antennas until a satisfactory coupling level occurs. To ensure that the measurement system is operating in the inverse square low region of the video detector or mixer, the RF level shall be changed by the attenuator in known fixed steps A 10 dB step shall be within ±0.5 dB.

40.2.2 Arch measurements The procedures in a through f shall be followed to test RAM for power reflected:

a. With the reference plate at the focal point of the test antennas, establish a reference level on the meter.

b. The RAM shall be loaded onto the table. Apply the signal to the RAM and take a reading The difference is a measure of the attenuation of the RAM, but that difference shall be validated by ensuring that the readings do not have large errors due to extraneous directly coupled signals. Determine difference between the reference level reading and the test reading. Move the receive antenna slowly through an arc about ±30 degrees around the normal The p-p variation shall be determined. The p-p variation represents the possible error spread in FIGURE 2, and may be used to determine the ratio of reflected to direct coupling (also shown in FIGURE 8). If the variation is reasonably small, the test reading should be approximately the average.

c Repeat the procedure in b at frequencies at ±5 percent of the design frequency as specified in 3 2.3 Determine the p-p variation

d Repeat the procedure in b at frequencies at ±10 percent of the design frequency as specified in 3 2.3. Determine the p-p variation.

e. From FIGURE 8 determine the performance of the RAM.

f The measurement errors shall be 2 dB or less. If allowing for this error, the power reflected requirements of 3.2.3 shall have a tolerance of 2 dB.

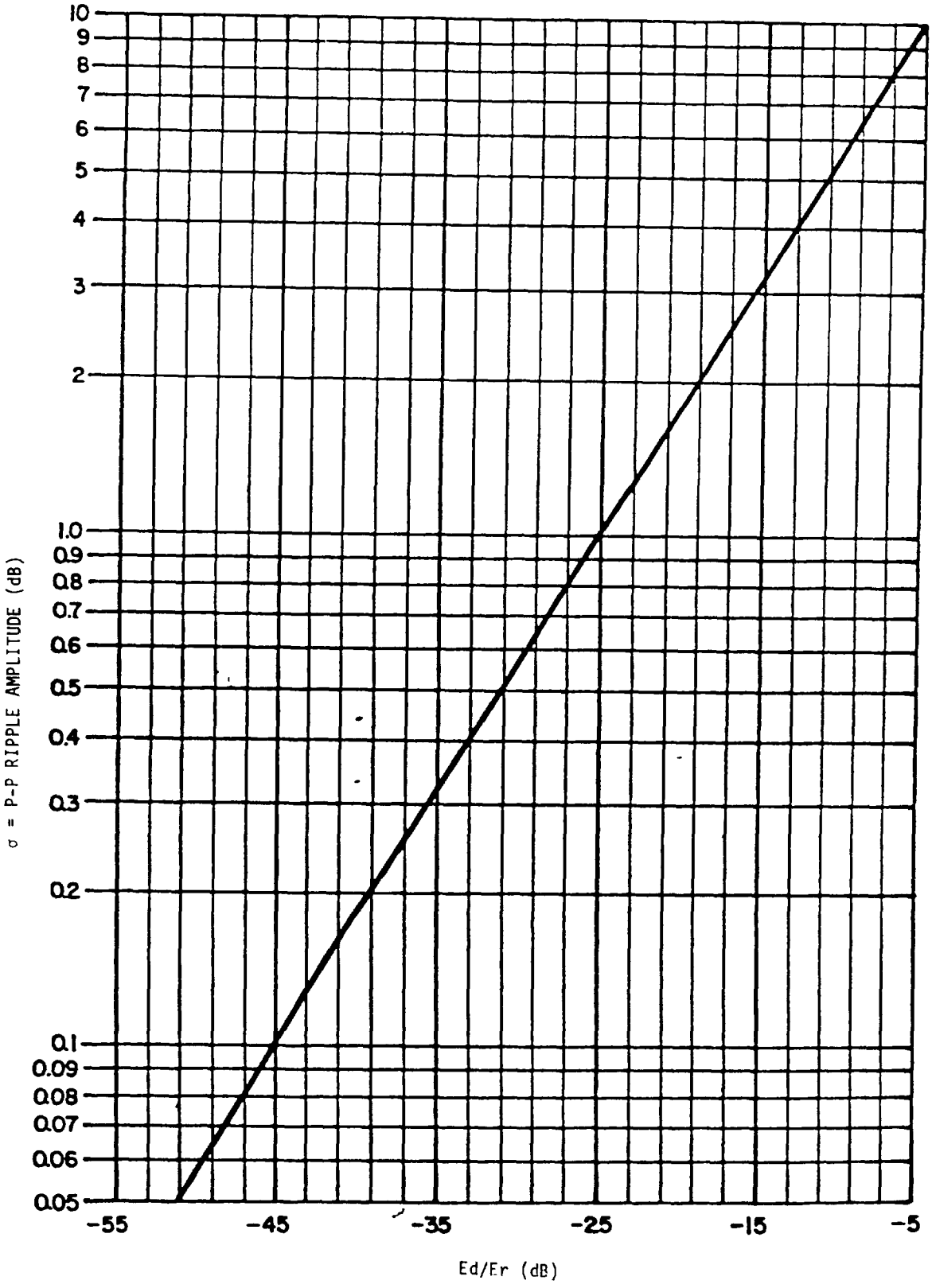

FIGURE 8 Extraneous signal level (reflectivity versus p-p ripple)

INSTRUCTIONS. In a continuing effort to make our standardization documents better, the DoD provides this form for use in submitting comments and suggestions for improvements All users of military standardization documents are invited to provide suggestions This form may be detached, folded along the lines indicated, taped along the loose edge *(DO NOT STAPLE)*, and mailed In block 5, be as specific as possible about particular problem areas such as wording which required interpretation, was too rigid, restrictive, loose, ambiguous, or was incompatible, and give proposed wording changes which would alleviate the problems Enter in block 6 any remarks not related to a specific paragraph of the document If block 7 is filled out, an acknowledgement will be mailed to you within 30 days to let you know that your comments were received and are being considered

NOTE This form may not be used to request copies of documents, nor to request waivers, deviations, or clarification of specification requirements on current contracts Comments submitted on this form do not constitute or imply authorization to waive any portion of the referenced document(s) or to amend contractual requirements.

(Fold along this line)

(Fold along this line)

DEPARTMENT OF THE NAVY

Naval Electronic Systems Command
Washington, DC 20363

NO POSTAGE NECESSARY IF MAILED IN THE UNITED STATES

OFFICIAL BUSINESS
PENALTY FOR PRIVATE USE $300

BUSINESS REPLY MAIL
FIRST CLASS PERMIT NO 12503 WASHINGTON D C

POSTAGE WILL BE PAID BY THE DEPARTMENT OF THE NAVY

COMMANDER
SPACE AND NAVAL WARFARE SYSTEMS COMMAND
DATA MANAGEMENT AND STANDARDIZATION BRANCH
DEPARTMENT OF THE NAVY
WASHINGTON, DC 20363-5100
ATTN: SPAWAR 8111

STANDARDIZATION DOCUMENT IMPROVEMENT PROPOSAL

(See Instructions – Reverse Side)

1 DOCUMENT NUMBER	2 DOCUMENT TITLE
MIL-A-17161 D	

3a NAME OF SUBMITTING ORGANIZATION	4 TYPE OF ORGANIZATION *(Mark one)*
	☐ VENDOR
	☐ USER
b ADDRESS *(Street, City, State ZIP Code)*	☐ MANUFACTURER
	☐ OTHER *(Specify)* _____

5 PROBLEM AREAS

a. Paragraph Number and Wording

b. Recommended Wording

c. Reason/Rationale for Recommendation

6 REMARKS

7a NAME OF SUBMITTER *(Last First, MI)* – Optional	b WORK TELEPHONE NUMBER *(Include Area Code)* – Optional
c MAILING ADDRESS *(Street, City, State ZIP Code)* – Optional	8 DATE OF SUBMISSION *(YYMMDD)*

DD FORM 82 MAR 1426

PREVIOUS EDITION IS OBSOLETE