NOTICE OF CHANGE

METRIC
MIL-STD-1399(NAVY)
SECTION 300A
NOTICE 1
11 March 1992

MILITARY STANDARD

INTERFACE STANDARD FOR SHIPBOARD SYSTEMS
SECTION 300A
ELECTRIC POWER, ALTERNATING CURRENT
(METRIC)

TO ALL HOLDERS OF MIL-STD-1399(NAVY), SECTION 300A

1. THE FOLLOWING PAGES OF MIL-STD-1399(NAVY), SECTION 300A HAVE BEEN REVISED AND SUPERSEDE THE PAGES LISTED:

NEW PAGE	DATE	SUPERSEDED PAGE	DATE
iii		iii	13 October 1987
iv		iv	13 October 1987
iva		NEW PAGE	
v		v	13 October 1987
va		NEW PAGE	
vi		vi	13 October 1987
vii	13 October 1987	vii	REPRINTED WITHOUT CHANGE
Viia		NEW PAGE	
viii		viii	13 October 1987
1		1	13 October 1987
2		2	13 October 1987
2a		NEW PAGE	
3		3	13 October 1987
3a		NEW PAGE	
4		4	13 October 1987
5		5	13 October 1987
5a		NEW PAGE	
6		6	13 October 1987
7		7	13 October 1987
7a		NEW PAGE	
8		8	13 October 1987
8a		NEW PAGE	
9		9	13 October 1987
10		10	13 October 1987
13		13	13 October 1987
14		14	13 October 1987
15		15	13 October 1987

AMSC N/A FSC 1990

DISTRIBUTION STATMENT A. Approved for public release; distribution is unlimited.

NEW PAGE	DATE	SUPERSEDED PAGE	DATE
15a		NEW PAGE	
16		16	13 October 1987
17	13 October 1987	17	REPRINTED WITHOUT CHANGE
18		18	13 October 1987
18a		NEW PAGE	
19		19	13 October 1987
20		20	13 October 1987
21		21	13 October 1987
22		22	13 October 1987
23	13 October 1987	23	REPRINTED WITHOUT CHANGE
24		24	13 October 1987
33		33	13 October 1987
34	13 October 1987	34	REPRINTED WITHOUT CHANGE
37		37	13 October 1987
38		38	13 October 1987
45		45	13 October 1987
46	13 October 1987	46	REPRINTED WITHOUT CHANGE
47		47	13 October 1987
48		48	13 October 1987

2. RETAIN THIS NOTICE AND INSERT BEFORE TABLE OF CONTENTS.

3. Holders of MIL-STD-1399(NAVY), SECTION 300A, will verify that page changes and additions indicated above have been entered. This notice page will be retained as a check sheet. This issuance, together with appended pages, is a separate publication. Each notice is to be retained by stocking points until the military standard is completely revised or canceled.

Review activities:
Navy - OS, YD

Preparing activity:
Navy - SH
(Project 1990 -N087)

FOREWORD

Purpose. This section defines the standard interface requirements for and the constraints on the design of shipboard user equipment that will utilize shipboard alternating current (at) electric power.

Nature of the interface. In any system involving power source, distribution network, and load (user equipment), the characteristics at the system and user equipment interface are mutually dependent upon the design and operation of both. In order for the electric power system to perform within the established tolerances, it is necessary to place constraints on the power source, the distribution system and the user equipment. This interface standard defines the electric power system characteristics, User equipment constraints are also established.

Structure. The technical content first delineates the characteristics of the shipboard electric power system at the interface in terms of voltage, frequency, continuity, and voltage waveform. Constraints on user equipment design and installation which are necessary to achieve shipboard compatibility with and to assure these characteristics are then established. Finally, test requirements are specified to verify conformance to this standard.

Invoking the standard. The Principal Development Activity (PDA) will consider the mission requirement of the user equipment being developed or acquisitioned. The PDA will then select those conditions under which the user equipment is to operate and those conditions which the user equipment will withstand without failure, but not necessarily operate normally. The PDA will also specify those tests commensurate with the equipment's mission, which will ensure the user equipment's satisfactory operation, the user equipment's compatibility with the shipboard electric power system and other equipment, and the equipment's survival.

NATO coordination and standardization. The standard characteristics of ac electric power supplied for U.S. Navy ships have been coordinated with NATO standardization documentation, where applicable. In particular, the standard characteristics of type I and type II power conform to corresponding power types specified in STANAG 1008 (Edition Number 7).

Numerical quantities. Numerical quantities are expressed in metric (SI) units followed by U.S. customary units in parentheses. The SI equivalents of the U.S. customary units are approximated to a practical number of significant figures. Values stated in U.S. customary units are to be regarded as the current specified magnitude.

Supersedes page iii of 13 October 1987.

CONTENTS

			Page
Paragraph	1.	GENERAL AND SCOPE	1
	1.1	General	1
	1.2	Scope	1
	1.2.1	User equipment	1
	1.3	Classification	1
	1.3.1	Special power classification	1
	1.4	Electrical interface	2
	2.	REFERENCED DOCUMENTS	2
	2.1	Government documents	2
	2.1.1	Standard	2
	2.2	Order of precedence	2
	3.	DEFINITIONS	2
	3.1	Current	2
	3.1.1	Current total harmonic distortion	2
	3.1.2	Single harmonic current	2
	3.1.3	Surge current	2
	3.2	Electric power system	3
	3.3	Electric power systems ground	3
	3.3.1	Grounded electric power system	3
	3.3.2	Ungrounded electric power system	3
	3.4	Emergency condition	3
	3.5	Frequency	3
	3.5.1	Nominal frequency	3
	3.5.2	Frequency tolerance	3
	3.5.3	Frequency transient tolerance	3
	3.5.4	Frequency transient recovery time	3
	3.5.5	Frequency modulation	3
	3.6	Current unbalance	4
	3.7	Limited-break power source	4
	3.8	Power factor (p.f.)	4
	3.8.1	Leading p.f.	4
	3.8.2	Lagging p.f.	4
	3.9	Pulse	4
	3.9.1	Pulse load	4
	3.9.2	Pulsing load	4
	3.9.3	Ramp load	4
	3.10	User equipment	4
	3.11	Voltage	4
	3.12	Nominal user voltage	4
	3.12.1	User voltage tolerance	4
	3.12.2	Line voltage unbalance tolerance (three-phase system)	5
	3.12.3	Voltage modulation (amplitude)	5
	3.12.4	Voltage transients	5

CONTENTS - Continued

			Page
Paragraph	3.12.6	Voltage waveform	5
	3.12.6.1	Voltage total harmonic distortion	5
	3.12.6.2	Voltage single harmonic	5
	3.12.6.3	Voltage deviation factor	5
	4.	GENERAL REQUIREMENTS	6
	4.1	Interface requirements	6
	4.2	Conformance test requirements	6
	4.3	Deviations	6
	5.	DETAILED REQUIREMENTS	6
	5.1	Electric power system characteristics	6
	5.1.1	Types of power	9
	5.1.2	Power interruption	9
	5.1.2.1	Limited-break power source	10
	5.1.2.1.1	No-break supply (uninterruptable power supply)	10
	5.1.2.2	Power interruption, type I, 60 Hz electric power system	10
	5.1.2.3	Power interruption, types II and III electric power system	10
	5.1.3	Grounding	10
	5.1.4	Phase sequence	11
	5.1.4.1	Phase angular relations	11
	5.1.5	User equipment protection	11
	5.1.5.1	Type I, 60 Hz power system	11
	5.1.5.2	Type II, 400 Hz power system protection	11
	5.1.5.3	Type III, 400 Hz power system protection	11
	5.1.5.4	Conditions not protected against	12
	5.1.6	Electric power system parameters	12
	5.1.6.1	System frequency	12
	5.1.6.1.1	Type I, 60 Hz frequency transients	12
	5.1.6.1.2	Type II, 400 Hz frequency transients	12
	5.1.6.1.3	Type III, 400 Hz frequency transients	12
	5.1.6.2	System voltage	12
	5.1.6.2.1	Type I, 60 Hz and type II, 400 Hz power voltage transient	13
	5.1.6.2.2	Type III, 400 Hz power transient voltage	13
	5.1.6.2.3	Voltage spike characteristics	13
	5.1.6.3	P.f.	14
	5.1.6.4	Source impedance	14
	5.2	User equipment interface requirements	14
	5.2.1	Compatibility	14
	5.2.2	Type of power	14
	5.2.2.1	Voltage	14
	5.2.3	Emergency conditions	14

CONTENTS - Continued

			Page
Paragraph	5.2.7.2	Ramp load	15
	5.2.8	Input current waveform	15
	5.2.8.1	Buffer for automatic test equipment (ATE)	15
	5.2.9	Surge current	16
	5.2.10	Protection of user equipment	16
	5.3	Test requirements	16
	5.3.1	Voltage and frequency tolerance test	16
	5.3.1.1	Apparatus	17
	5.3.1.2	Procedure	17
	5.3.2	Voltage and frequency transient tolerance and recovery test	17
	5.3.2.1	Apparatus	17
	5.3.2.2	Procedure	18
	5.3.3	Voltage spike test	18
	5.3.3.1	Apparatus	18
	5.3.3.2	Procedure	18
	5.3.4	Emergency condition test	19
	5.3.4.1	Apparatus	19
	5.3.4.2	Procedure	19
	5.3.5	Grounding test	20
	5.3.5.1	Apparatus	20
	5.3.5.2	Procedure	20
	5.3.6	User equipment power profile test	20
	5.3.6.1	Apparatus	21
	5.3.6.2	Procedure	21
	5.3.7	Current waveform test	21
	5.3.7.1	Apparatus	21
	5.3.7.2	Procedure	22
	5.3.8	Equipment test	22
	5.3.9	Voltage and frequency modulation test	22
	5.3.9.1	Apparatus	22
	5.3.9.2	Procedure	22
	6.	NOTES	22
	6.1	Intended use	22
	6.2	Subject term (key word) listing	23
	6.3	Changes from previous issue	23

FIGURES

Figure	1	Typical interface of electric power system and user equipment	24
	2	Voltage spike impulse wave shape	25

Supersedes page vi of 13 October 1987.

CONTENTS - Continued

			Page
Figure	3	Voltage and frequency decay characteristics on loss of prime mover - typical steam turbine driven generator set type I, 60 Hz electric power system	26
	4	Type I worst case and frequency tolerance envelopes	27
	5	Type II worst case and frequency tolerance envelopes	28
	6	Type III worst case and frequency tolerance envelopes	29
	7	Types I and II, 440 V power - worst case and user voltage tolerance envelopes	30
	8	Types I and II, 115 V power - worst case and user voltage envelopes	31
	9	Type III, 440 V, 400 Hz power - worst case and user voltage tolerance envelopes	32
	10	Type III, 115 V, 400 Hz power - worst case and user voltage tolerance envelopes	33
	11	Seven day histogram of voltage spikes versus number of voltage spikes in 440 V systems	34
	12	Pulsed load limits	35
	13	Pulsed load limits (fast-acting regulators and exciters)	36
	14	Surge current limits for non-linear user equipment using type I power	37
	15	Surge current limits for non-linear user equipment using type II or III power	38
	16	Test circuit for application of line-to-line and line-to-ground high voltage spikes to user equipment supplied by three-phase, 60 Hz power	43
	17	Test circuit for application of line-to-line high voltage spikes to user equipment supplied by ac or dc power	44
	18	Test circuit for application of line-to-line and line-to-ground high voltage spikes to user equipment supplied by three-phase, 400 Hz power	50
	19	Test circuit for application of line-to-line and line-to-ground high voltage spikes to user equipment supplied by single-phase ac or dc power	52

TABLES

Table	I	Electric power system characteristics at the interface	7
	II	Voltage and frequency tolerance test	16

REPRINTED WITHOUT CHANGE.

CONTENTS - Continued

Page

APPENDICES

APPENDIX A Procedure for voltage spike test, line-to-line and line-to-ground, type I, 60 Hz, three-phase user equipment 39

B Procedure for voltage spike test, line-to-line, types I, II, and III, 60 and 400 Hz, single and three-phase user equipment 45

C Procedure for voltage spike tests, line-to-line and line-to-ground, types II and III, 400 Hz, three-phase user equipment 47

D Procedure for voltage spike tests, line-to-line and line-to-ground, types I, II, and III, 60 and 400 Hz, single-phase user equipment 51

1. GENERAL AND SCOPE

1.1 General. The policies and procedures established by MIL-STD-1399 are mandatory. Section 300A and the basic standard are to be viewed as an integral single document for use in the design and testing of electric power systems and user equipment.

1.2 Scope. This section establishes electrical interface characteristics for ship-boarcl equipment utilizing ac electric power to ensure compatibility between user equipment and the electric power system. Characteristics of the electric power system are defined and tolerances are established. User equipment shall operate from a power system having these characteristics and shall be designed within these constraints in order to reduce adverse effects of the user equipment on the electric power system. Test methods are included for verification of compatibility.

1.2.1 User equipment. User equipment to be installed on ships built to superseded versions of this standard shall meet the most stringent demands of the applicable version.

1.3 Classification. Types of shipboard electric power to be supplied from the electric power system are as follows:

Type I - Type I power is 440 or 115 volts (V), 60 hertz (Hz) ungrounded and is the standard shipboard electric power source. Type I power shall be used unless a deviation is granted (see 4.3).

Type II - Type II power is 440 or 115 V, 400 Hz ungrounded and has only limited application. Use of type II power requires the submittal and approval of a deviation request (see 4.3).

Type III - Type III power is 440 or 115 V, 400 Hz ungrounded having tighter tolerances as compared to types I and II. Type III power has restricted use and its use requires submittal and approval of a deviation request (see 4.3).

1.3.1 Special power classification. Types of shipboard electric power supplied only for avionic shops and aircraft servicing are as follows:

Type I - Type I power is 115/200 V, 60 Hz, 3 phase, 4 wire, Wye grounded. This power is only provided for avionic shops.

Type III - Type III power is 115/200 V, 400 Hz, 3 phase, 4 wire, Wye grounded. This power is only provided for avionic shops and for aircraft servicing.

1.4 Electrical interface. The basic characteristic and constraint categories concerned with this interface are shown symbolically on figure 1. This interface is a location between the electric power system and the user equipment. The interface is at the junction where the cable designations change from power or lighting designations, such as P, EP, PP, L, EL, or SF, to other designations or where no cable designation changes are made at the user equipment electric power input terminals. Functionally, the interface is the location wherein the electric power system characteristics (see 5.1) and the user equipment constraints (see 5.2)apply.

2. APPLICABLE DOCUMENTS

2.1 Government documents.

2.1.1 Specifications, standards, and handbooks. The following specifications, standard, and handbooks form a part of this document to the extent specified herein. Unless otherwise specified, the issues of these documents are those listed in the issue of the Department of Defense Index of Specifications and Standards (DODISS) and supplement thereto, cited in the solicitation (see 6.2).

STANDARD

MILITARY
MIL-STD-1399 - Interface Standard for Shipboard Systems.

(Unless otherwise indicated, copies of federal and military specifications, standards, and handbooks are available from the Standardization Documents Order Desk, BLDG. 4D, 700 Robbins Avenue, Philadelphia, PA 19111-5094.)

2.2 Order of precedence. In the event of a conflict between the text of this document and the references cited herein (except for related associated detail specifications, specifications, specification sheets or MS standards), the text of this document takes precedence. Nothing in this document, however, supersedes applicable laws and regulations unless a specific exemption has been obtained.

3. DEFINITIONS

3.1 Current.

3.1.1 Current total harmonic distortion. Total harmonic distortion (THD) of the current is the ratio, in percentage, of the root mean square (rms) value of the residue (after elimination of the fundamental) to the rms value of the fundamental.

3.1.2 Single harmonic current. Single harmonic content of a current waveform is the ratio, in percentage, of the rms value of that harmonic to the rms value of the fundamental.

3.1.3 *Surge current.* Surge current is a sudden change in line current to a user equipment that occurs during start-up or as a result of a change to the operating mode. Typically, the surge current will rise to a maximum value in a few milliseconds (ms) and decay to rated value in several ms to several seconds.

NEW PAGE.

3.2 Electric power system. Electric power system covers the electric power generation and distribution system including generation, cables, switchboards, protective devices, converters, transformers, and regulators up to the user equipment Interface.

3.3 Electric power systems ground. Ground is a plane or surface used by the electric power system as a common reference to establish zero potential. Usually, this surface is the metallic hull of the ship. On a nonmetallic hull ship, a special ground system is installed for this purpose.

3.3.1 Grounded electric power system. A grounded electric power system is a system in which at least one conductor or point (usually the middle wire or neutral point of the transformer or generator winding) is intentionally and effectively connected to system ground.

3.3.2 Ungrounded electric power system. An ungrounded electric power system is a system that is intentionally not connected to the metal structure or the grounding system of the ship, except for test purposes.

3.4 Emergency condition. An emergency condition is an unexpected occurrence of a serious nature that may result in electrical power system deviations as specified under emergency conditions in 5.1.2 and 5.2.3. Emergency conditions include but are not limited to battle damage and malfunction/failure of equipment.

3.5 Frequency.

3.5.1 Nominal frequency. Nominal frequency is the designated frequency in Hz.

3.5.2 Frequency tolerance. Frequency tolerance is the maximum permitted departure from nominal frequency during normal operation, excluding transients and modulation. This includes variations such as those caused by load changes, environment (temperature, humidity, vibration, inclination), and drift. Tolerances are expressed in percentage of nominal frequency.

3.5.3 Frequency transient tolerance. A frequency transient is a sudden change in frequency that goes outside the frequency tolerance limits and returns to and remains inside these limits within a specified recovery time after initiation of the disturbance. The frequency transient tolerance is in addition to the frequency tolerance limits.

3.5.4 Frequency transient recovery time. Frequency transient recovery time is the time elapsed from initiation of the disturbance until the frequency recovers and remains within the frequency tolerance limits.

3.5.5 Frequency modulation. Frequency modulation is the permitted periodic variation in frequency during normal operation that might be caused by pulsing loads. For purposes of definition, the periodicity of frequency modulation should be considered as not exceeding 10 seconds.

$$\text{Frequency modulation (percent)} = \left(\frac{f_{maximum} - f_{minimum}}{2 \times f_{nominal}} \right) \times 100$$

NEW PAGE.

3.6 Current unbalance Current unbalance for three-phase loads is the rat of the maximum line current less the minimum line current to the average of the three line currents in amperes.

Current unbalance (percent) -

$$\left(\frac{\text{Maximum line current - minimum line current}}{\text{Average of the three line currents}}\right) \times 100$$

3.7 Limited-break power Source. Limited-break power source is a power source provided by one or two or more independent power sources incorporating automatic means for detecting failure of the power source and for transferring the user equipment load to another power source within a specified time period.

3.8 Power factor (p.f.). P.f. is the ratio of total watts to the total root-mean-square volt-amperes.

3.8.1 Leading p.f. A leading p.f. is one in which the input current is leading the input voltage.

3.8.2 Lagging p.f. A lagging p.f. is one in which the input current is lagging the input voltage.

3.9 Pulse. A pulse is a brief excursion of power lasting longer than 1 cycle at nominal frequency and less than 10 seconds.

3.9.1 Pulse load. A pulse load is the average power during the pulse internal minus the average power during the same internal immediately preceding the pulse.

3.9.2 Pulsing load. A pulsing load is one that imposes pulse loads in the form of pulses regularly or randomly repeated on the electrical system. .

3.9.3 Ramp load. A ramp load is a load that is applied to the electrical system in steps (increments of the total load).

3.10 User equipment. User equipment is any system or equipment that uses electric power from the shipboard electric power system.

3.11 Voltage. Unless otherwise specified, voltages in this standard are rms. Tolerances are expressed in percent of the nominal user voltage.

3.12 Nominal user voltage. Nominal user voltage is the designated voltage at the interface.

3.12.1 User voltage tolerance. User voltage tolerance is the maximum permitted departure from nominal user voltage during normal operation, excluding transients and modulation. User voltage tolerance includes variations such as those caused by load changes, environment (temperature, humidity, vibration, inclination), and drift.

3.12.2 Line voltage unbalance tolerance (three-phase system). Line voltage unbalance tolerance is the difference between the highest and the lowest line-to-line voltages.

$$\text{Line voltage unbalance tolerance (percent)} = \left(\frac{E\ max - E\ min}{E\ nominal}\right) \times 100$$

3.12.3 Voltage modulation (amplitude). Voltage modulation is the periodic voltage variation. (peak-to-valley) of the user voltage, such as that might be caused by pulsing loads. The periodicity of voltage modulation is considered to be longer than 1 cycle time at nominal frequency and less than 10 seconds. Voltages used in the following equation shall be all peak or all rms:

$$\text{Voltage modulation (percent)} = \left(\frac{E\ max - E\ min}{2 \times E\ nominal}\right) \times 100$$

3.12.4 Voltage transients.

3.12.4.1 Voltage transient tolerance. A voltage transient (excluding voltage spikes) is a sudden change in voltage that goes outside the user voltage tolerance limits and returns to and remains within these limits within a specified recovery time (longer than 1 ms) after the initiation of the disturbance. The voltage transient tolerance is in addition to the user voltage tolerance limits.

3.12.4.2 Voltage transient recovery time. Voltage transient recovery time is the time elapsed from initiation of the disturbance until the voltage recovers and remains within the user voltage tolerance limits.

3.12.5 Voltage spike. A voltage spike is a voltage change of very short duration (less than 1 ms). The impulse shown on figure 2 is the characteristic voltage spike used for test purposes.

3.12.6 Voltage waveform.

3.12.6.1 Voltage total harmonic distortion. Total harmonic distortion of a voltage wave is the ratio in percentage of the rms value of the residue (after elimination of the fundamental) to the rms value of the fundamental.

3.12.6.2 Voltage single harmonic. The single harmonic voltage content of a voltage wave is the ratio in percentage of the rms value of that harmonic to the rms value of the fundamental.

3.12.6.3 Voltage deviation factor. The voltage deviation factor of the voltage wave is the ratio of the maximum difference between corresponding ordinates of the wave and of the equivalent sine wave to the maximum ordinate of the equivalent sine wave when the waves are superimposed in such a way that they make the maximum difference as small as possible. Note: The equivalent sine wave is defined as having the same frequency and the same rms voltage as the wave being tested.

$$\text{Voltage deviation factor (percent)} = \left(\frac{\text{Maximum deviation}}{\text{Maximum ordinate of the equivalent sine wave}}\right) \times 100$$

NEW PAGE.

4. GENERAL REQUIREMENTS

4.1 Interface requirements. The specific interface requirements and constraints established herein are mandatory and shall be adhered to by SYSCOMS, project managers, contractors, and all others engaged in any aspect of shipboard electrical power systems or user equipment designs to which these requirements and constraints apply, including systems and equipment design, production, and installation (see requirements of MIL-STD-1399).

4.2 Conformance test requirements. Requirements and tests to ensure conformance of equipment to the interface requirements and constraints incorporated in this standard shall be included in the electric power system and user equipment specifications.

4.3 Deviations. In achieving the purpose of this section, it is recognized that there must be some flexibility of application. The deviation provisions in MIL-STD-1399 shall be adhered to during the early development stage of user equipment. Requests for deviation shall be submitted for approval to the Naval Sea Systems Command (NAVSEA) with copies to the NAVSEA Electrical Systems Sub-Group. Unless the deviation is approved by NAVSEA, the user equipment will not be approved for shipboard use.

5. DETAILED REQUIREMENTS

5.1 Electric power system characteristics. The shipboard electric power system serves a variety of user equipment such as aircraft elevators, air conditioners, communication equipment, weapon systems, and computers. Electric power is centrally generated and distributed throughout the ship from the switchboard to power panels and finally to the user equipment served. Ship design requires that conversion equipment be minimized and that most equipment served be designed to operate from the type I, 60 Hz power system. Performance of the ship can best be served by minimizing the requirement for types II or III, 400 Hz power. Table I lists the characteristics of shipboard electric power systems. For 115/200 V, 4 wire grounded systems as specified in 5.1.6.2(e) and (f), the characteristics apply to line to neutral power unless the parameter is inappropriate; for example, line balance would not apply.

TABLE I. Electric power system characteristics at the interface.

Characteristics	Type I	Type II1/	Type III1/
Frequency:			
(a) Nominal frequency	60 Hz	400 Hz	400 Hz
(b) Frequency tolerances	Plus or minus 3 percent (5 percent for submarines)	Plus or minus 5 percent	Plus or minus 1/2 percent
(c) Frequency modulation	1/2 percent	1/2 percent	1/2 percent
(d) Frequency transient			
(1) Tolerance	Plus or minus 4 percent	Plus or minus 4 percent	Plus or minus 1 percent
(2) Recovery time	2 seconds	2 seconds	0.25 second
(e) The worst case frequency excursion from nominal frequency resulting from (b), (c), and (d)(1) combined except under emergency conditions	Plus or minus 5-1/2 percent	Plus or minus 6-1/2 percent	Plus or minus 1-1/2 percent
Voltage:			
(f) Nominal user voltage	440, 115 or 115/200 V rms2/ (see 1.3.1)	440 or 115 V rms	440 or 115 V 115/200 V rms2/ (see 1.3.1)
(g) User voltage tolerance (see figures 7 through 10)			
(1) Average of the three line-to-line voltages	Plus or minus 5 percent	Plus or minus 5 percent	Plus or minus 2 percent (Plus or minus 1/2 percent for avionic shops only)
(2) Any one line-to-line voltage including g(1) and line voltage unbalance (h)	Plus or minus 7 percent	Plus or minus 7 percent	Plus or minus 3 percent (plus 3 V minus 2 V)2/ (Plus or minus 1-1/6 percent for avionic shops only)

See footnotes at end of table.

Supersedes page 7 of 13 October 1987

TABLE I. Electric power system characteristics at the interface - Continued.

Characteristics	Type I	Type II1/	Type III1/
Voltage (continued):			
(h) Line voltage unbalance	3 percent (0.5 percent for 440 V, 1.0 percent for 115 V; for submarines)	3 percent	2 percent (1 percent for avionic shops only)
(i) Voltage modulation	2 percent	2 percent	1 percent
(j) Voltage transient			
(1) Voltage transient tolerance	Plus or minus 16 percent	Plus or minus 16 percent	Plus or minus 5 percent
(2) Voltage transient recovery time	2 seconds	2 seconds	0.25 second
(k) Voltage spike (peak value, includes fundamental)	Plus or minus 2,500 V (440 V sys) 1,000 V (115 V sys)	Plus or minus 2,500 V (440 V sys) 1,000 V (115 V sys)	Plus or minus 2,500 V (440 V sys) 1,000 V (115 V sys)

NEW PAGE.

TABLE I. Electric power system characteristics at the interface - Continued.

Characteristics	Type I	Type II1/	Type III1/
Voltage (continued):			
(l) The maximum departure voltage resulting from (g)(1),(g)(2), (h) and (i) combined, except under transient or emergency conditions	Plus or minus 6 percent	Plus or minus 6 percent	Plus or minus 2-1/2 percent
(m) The worst case voltage excursion from nominal user voltage resulting from (g)(1), (g)(2), (h), (i), and (j)(1) combined, except under emergency conditions	Plus or minus 20 percent	Plus or minus 20 percent	Plus or minus 5-1/2 percent
(n) Insulation resistance test			
(1) Surface ships	500 Vdc megohmeter	500 Vdc megohmeter	500 Vdc megohmeter
(2) Submarines active ground detector test	500 V average, full wave rectified dc (see 5.1.5.4)	N/A	N/A
Waveform (voltage):			
(o) Maximum total harmonic distortion	5 percent	5 percent	3 percent
(p) Maximum single harmonic	3 percent	3 percent	2 percent
(q) Maximum deviation factor	5 percent (3 percent for submarines)	5 percent	5 percent
Emergency conditions:			
(r) Frequency excursion 3/	Minus 100 to plus 12 percent	Minus 100 to plus 12 percent	Minus 100 to plus 12 percent
(s) Duration of frequency excursion	up to 2 minutes	up to 2 minutes	up to 2 minutes

See footnotes at end of table.

Supersedes page 8 of 13 October 1987.

TABLE I. Electric power system characteristics at the interface - Continued.

Characteristics	Type I	Type II1/	Type III1/
(t) Voltage excursion	Minus 100 to plus 35 percent	Minus 100 to plus 35 percent	Minus 100 to plus 35 percent
(u) Duration of voltage excursion			
(1) Lower limit (minus 100 percent)	Up to 2 minutes	Up to 2 minutes	Up to 2 minutes
(2) Upper limit (plus 35 percent)	2 minutes	0.17 second	0.17 second

See footnotes at top of next page.

1/ Type II or III power provided by deviation only (see 4.3) Type I, 60 Hz power shall be used for new user equipment development unless a deviation is granted.
2/ see 5.1.
3/ Frequency will not decrease to 0 (minus 100 percent) Without a decrease in voltage. Figure 3, 5.1.2.2, and 5.1.2.3 shall apply.

5.1.1 Types of power: Types of power are as follows:

(a) Type I, 60 Hz power: the ship service power distribution system supplied by the ship's generators is 440 V, 60 Hz, three-phase, ungrounded. The ship's lighting distribution system supplied from the ship service power distribution system through transformers is 115 V, 60 Hz, three-phase, ungrounded. The 115 V, 60 Hz, three-phase, ungrounded circuits are also available through transformers to supply other user equipment, (for example, electronic equipment). Single-phase power is available from both the 440 V and the 115 V systems. The ship service power and lighting distribution systems are designated as type 1. See 1.3.1 for special power type.

(b) Type II and III, 400 Hz power: The ship service power supplied by 400 Hz motor generator sets or solid state converters is 440 V, three-phase, 400 Hz, ungrounded. The 400 Hz power is of two kinds, designated as types II and III. Subject to approval of a deviation request, the use of type II is preferred over type III but, if more precise characteristics are mandatory, type 111 power may be supplied. Table I specifies the characteristics of types II and III power. See 1.3.1 for special power types.

5.1.2 Power interruption. From time-to-time, the electric power will be interrupted and may also be rapidly re-energized in less than 1 second. The power interruption may range from less than 1 ms to several minutes. The interruptions can occur as a result of an equipment casualty, training exercise or operator error. In order to maintain reliability and continuity during the diverse operating conditions such as anchor, cruising, functional and emergency conditions, some loads are provided with a limited-break power source where possible. The extent to which this can be done will vary with the ship design, electric plant capacity and the specific user equipment. In some instances, user systems and equipment are not provided with a limited-break power source because of the need to control the power-up cycle after the interruption. In other instances, the capacity of the ship service or emergency generators may limit the use of limited-break power sources. In those instances, user equipments will be provided two sources of power selectable by means of a manual transfer switch.

5.1.2.1 Limited-break power source. A limited-break power source is accomplished by means of a normal feeder from one ship service switchboard and either an alternate feeder from mother ship service switchboard or an emergency feeder from an emergency switchboard. On loss of the normal power source, loads are transferred to the alternate or emergency power source by means of a bus transfer switch . A time delay may be required between the loss of the normal power source and switching to the alternate power source to avoid excessive transient currents caused by residual voltage. In the case of switching from a normal to emergency power source, an additional time delay is experienced to automatically start the emergency generator on standby. The time delays result in a transfer time from one power source to another of 0.05 second to 2 minutes.

5.1.2.1.1 No-break supply (uniterruptable power supply). No-break supply is accomplished by a power supply provided by one or more independent power sources for which the change over time is zero and the supply characteristics are continuously held within specified limits. In a special case, a no-break supply may be specified to have a limited time duration for the alternative source. A no-break power supply is not provided by the shipboard electric power system. If a no-break power supply is required, it shall be specified as an integral part of the user equipment.

5.1.2.2 Power interruption, type I, 60 Hz electric power system. An electric power interruption can occur on type I, 60 Hz electric power system as a result of the loss of prime mover, equipment failures, or by the operation of switching equipment. The interruption can occur during normal operations when no damage has occurred such as during training exercises or during mechanical or electric power system tests. Figure 3 illustrates the voltage and frequency decay characteristics of a steam driven generator set on loss of prime mover, The voltage may start to decay when the frequency decays to about 40 Hz. The frequency decays to 40 Hz in approximately 5 to 20 seconds after the loss of the prime mover, depending on the initial load and the inertia of the generator set. Under the power interruption condition, the voltage may not reduce to zero for up to 2 minutes.

5.1.2.3 Power interruption, types II and III electric power system. Loss of input power to 60/400 Hz motor generator (MG) sets will activate control circuits provided with MG sets which trip the MC circuit breaker. This interrupts power to 400 Hz loads in a few milliseconds. Upon loss of 60 Hz power to solid state frequency changers, the 400 Hz power is interrupted within 2 ms by controls in the frequency changer. Voltage and frequency monitors provided separate from conversion equipment controls, trip the MG 400 Hz output circuit breaker when the output voltage or frequency reach those values specified in 5.1.5.2 or 5.1.5.3 as applicable to the type power provided.

5.1.3 Grounding. Electric power systems shall be ungrounded, except as specified in 5.1.6.2(e) and (f) and 5.2.4 and grounding permitted for the operation of ground detection equipment. Under ungrounded conditions, a leakage current of up to 20 amperes may exist in an electric power system as a result of capacitive coupling of cables and equipment filters connected to ground.

5.1.6.2.1 Type I, 60 Hz and type II, 400 Hz power voltage transient. Figure 7 illustrates the 440 V type I, 60 Hz and type II, 400 Hz voltage transient and user voltage tolerance envelope specified in table I. Figure 8 illustrates the 115 V type I, 60 Hz, type II, 400 Hz, worst case voltage excursion and user voltage tolerance envelope specified in table I. Voltage transients of 10 percent or less may occur several times an hour, and voltage transients of 10 to 16 percent may occur several times a day (percentages based on nominal user voltage). The time to reach the transient maximum may vary from 0.001 to 0.03 second, or to reach the transient minimum may vary from 0.001 to 0.06 second on types I and II power systems, depending on the rating of the generator and the type regulator and excitation system employed. The sudden application of user equipment to the type I or II electric power system may cause the voltage to decrease to the transient voltage minimum value within 0.001 to 0.06 second. The voltage may than increase to a maximum value that is above the nominal voltage by an amount equal to 1/3 to 2/3 of the minimum transient voltage drop at a rate equal to 20 to 75 percent of the nominal voltage per second. Recovery to within the user voltage tolerance envelope will occur within 2 seconds. The sudden removal of a user equipment from the electric power system may cause the voltage to increase to the transient voltage maximum within 0.001 to 0.03 second. The voltage may then decrease to a minimum value that is below the nominal voltage by an amount equal to 1/3 to 2/3 of the maximum transient voltage rise at a rate equal to 20 to 75 percent of the nominal voltage per second. Recovery to within the user voltage tolerance envelope will occur within 2 seconds.

5.1.6.2.2 Type III, 400 Hz power transient voltage. Figure 9 illustrates the 440 V, type 111, 400 Hz worst case voltage excursion and user voltage tolerance envelope specified in table I. Figure 10 illustrates the 115 V, 400 Hz, worst case voltage excursion and user voltage tolerance envelope as specified in table 1. Voltage transients of 5 percent or less may occur several times an hour. The time to reach the transient maximum may vary from 0.001 to 0.1 second. The sudden application of a user equipment to the type III, 400 Hz electric power system may cause the voltage to decrease to the transient voltage minimum within 0.001 to 0.1 second. The voltage may then increase to a maximum value that is above the nominal voltage by an amount equal to 1/3 to 2/3 of the minimum transient voltage drop at a rate equal to 50 to 100 percent of the nominal voltage per second. Recovery to within the user voltage tolerance envelope will occur within 0.25 second. The sudden removal of a user equipment from the type III, 400 Hz electric power system may cause the voltage to increase to the transient voltage maximum within 0.001 to 0.1 second. The voltage may then decrease to a minimum value that is below the nominal voltage by an amount equal to 1/3 to 2/3 of the maximum transient voltage rise at a rate equal to 50 to 100 percent of nominal voltage per second. Recovery to within the user voltage tolerance envelope will occur within 0.25 second.

5.1.6.2.3 Voltage spike characteristics. Voltage spikes of 2,500 V maximum on 440 V systems and 1,000 V on 115 V systems may be present on the electrical power system between line-to-line and between line-to-ground (or neutral). The amplitude and waveform of voltage spikes will vary depending on system parameters. Figure 11 (which was derived from shipboard data) illustrates the peak amplitude and relative probability of occurrence of voltage spikes.

Supersedes page 13 of 13 October 1987.

5.1.6.3 P.f. Shipboard electric power systems are designed to operate with an overall p.f. of 0.8 lagging to 0.95 leading for 60 Hz power systems and 0.8 lagging to unity for 400 Hz power systems.

5.1.6.4 Source impedance. The source impedance of shipboard electric power systems may be assumed to be 5 ohms at 100 to 200 kilohertz (kHz).

5.2 User equipment interface requirements. Constraints on user equipment specified in the following paragraphs are the minimum necessary to maintain the electrical power system characteristics specified in table I.

5.2.1 Comparability. The construction of user equipment utilizing electric power shall be compatible with the electric power system characteristics as specified in 5.1.

5.2.2 Type of power. User equipment shall be designed for type I power unless a deviation request is approved (see 4.3), except for equipment operating from power in accordance with 5.2.2.1(c) or (d).

5.2.2.1 Voltage. Voltage preference shall be as follows:

(a) User equipment rated 5 kilovoltamperes (kVA) or more shall operate from 440 V, three-phase, ac input power.
(b) User equipment rated less than 5 kVA shall operate from 440 V, three-phase, ac input power. Where such an input is not practical, the following shall be the order of preference;
(1) 440 V, single-phase.
(2) 115 V, three-phase.
(3) 115 V, single-phase.
(c) Special voltage - 115/200 V, three-phase, 4-wire, 400 Hz, grounded neutral. This power shall only be provided for aircraft servicing and avionic shops.
(d) Special voltage - 115\200 V, three-phase, 4-wire, 60 Hz, grounded neutral. This power shall only be provided for avionic shops.

5.2.3 Emergency conditions. User equipment shall withstand electric power interruptions, rapid reapplications of power (see 5.1.2), and the emergency conditions specified in table I.

5.2.4 Grounding. User equipment, except for equipment on special voltage (grounded system (see .5.2.2.1(c) and (d)), shall be ungrounded as related to the electric power system ground. Where power line filters are required in the user equipment, a line-to-line configuration is preferred. If a line-to-ground configuration is used for filtering, then the value of the filter capacitance shall not exceed 0.1 microfarad per phase for 60 Hz equipment and 0.02 microfarad per phase for 400 Hz equipment. If performance or operational needs of a user equipment require an electrical ground either solidly or by means of capacitors which exceed the values stated above or if the leakage current exceeds 30 milliamperes (mA) per phase, then that equipment shall be electrically isolated from the power system. The neutral connection to user equipment on special voltage systems shall not be grounded at the user equipment.

5.2.5 Current unbalance. User equipment comprised of a combination of single-phase and three-phase loads shall have a resulting line current unbalance not exceeding 5 percent (submarines 3 percent) of the user equipment rating under normal operating conditions and during normal operating modes. This requirement does not apply to aircraft servicing systems that are designed for a maximum current unbalance of 15 percent of the user equipment rating.

5.2.6 P.f. User equipment shall operate within the user frequency and voltage tolerance envelopes of figures 4 through 10 as applicable with an overall p.f. within the range of 0.8 lagging to 0.95 leading for 60 Hz and 0.8 lagging to unity for 400 Hz under normal steady state operating conditions, excluding start-ups and pulsing loads.

5.2.7 Pulsed load limits. Pulsed loads shall be limited to the following when the power source characteristics are unknown:

Type I, 60 Hz power systems - 70 kVA
Type II, 400 Hz power systems - 21 kVA
Type III, 400 Hz power systems - 9 kVA

Loads exceeding these limits will cause voltage and frequency modulation exceeding the limits of power source standards (see table I).

5.2.7.1 Special pulsed load limits. When the power source characteristics are known, (that is, the generator reactance, time constraints, and the type voltage regulator and exciter used), pulsed load limits may be determined from figures 12 or 13 as applicable.

5.2.7.2 Ramp load. Ramp loading shall be limited to an average rate of 2,000 kVA per second. No step shall be greater than that specified for pulsed loads (see 5.2.7).

5.2.8 Input current waveform. The operation of user equipment shall have the minimum harmonic distortion effect on the electric system. The operation of user equipment of the following specified ratings shall not cause single harmonic line currents to be generated that are greater than 3 percent of the unit's full rated load fundamental current between the second and thirty-second harmonic.

Frequency of power source (Hz)	Rating of unit
60	1 kVA or more
400	0.2 kVA or more on other than a single-phase, 115 V source
400	2 amperes or more on a single-phase, 115 V source

Additionally, currents with frequencies from the thirty-second harmonic through 20 kHz shall not exceed 100/n percent of the unit's rated full load fundamental current, where n is the harmonic multiple number. Units with power ratings less

Supersedes page 15 of 13 October 1987.

than those specified above shall be current amplitude limited so that no individual harmonic line current from the second harmonic through 20 kHz exceeds a magnitude of 100/n percent of the unit's rated full load fundamental current.

5.2.8.1 Buffer for automatic test equipment (ATE). When an ATE in any avionic shop cannot meet the input current waveform limits specified in 5.2.8, an interface buffer shall be provided as part of the ATE. The buffer-ATE combination shall meet the input current waveform limits,

NEW PAGE.

5.2.9 Surge current. Non-linear load user equipment shall be constructed to limit the ratio of surge current to normal operating current to the value determined from figure 14 for type I, 60 Hz electric power and figure 15 for types IX and III, 400 Hz electric power system.

5.2.10 Protection of user equipment. User equipment shall be designed so that it will not sustain damage as a result of:

(a) 500 Vdc insulation resistance tests. (Surface ships)
(b) Active ground detector tests (submarines) (500 V average) full-wave rectified voltage superimposed on the ac system, (see 5.1.5.4 and table I).

5.3 Test requirements. User equipment test requirements are intended to verify conformance to the user equipment interface requirements when tested in accordance with the procedures specified herein.

5.3.1 Voltage and frequency tolerance test. This test shall be used to evaluate the performance of user equipment under the voltage and frequency conditions of table II.

TABLE II. Voltage and frequency tolerance test.

	User voltage tolerance			Frequency tolerance Hz		
	Lower limit	Nominal	Upper limit	Lower limit	Nominal	Upper limit
Type I, 3-phase	109 or 418	115 or 440	121 or 462	58.2	60	61.8
Type I, 1-phase	107 or 409	115 or 440	123 or 471	58.2	60	61.8
Type II, 3-phase	109 or 418	115 or 440	121 or 462	380	400	420
Type II, 1-phase	107 or 409	115 or 440	123 or 471	380	400	420
Type III, 3-phase	113 or 431	115 or 440	117 or 449	398	400	402
Type III, 1-phase	112 or 427	115 or 400	118 or 453	398	400	402
Type I grounded, 3-phase	190	200	210	58.2	60	61.8
Type I grounded, 1-phase	109	115	121	58.2	60	61.8
Type III grounded, 3-phase	197	200	205	398	400	402
Type III grounded, 1-phase	113	115	118	398	400	402

Supersedes page 16 of 13 October 1987.

5.3.1.1 Apparatus. The following apparatus is recommended for performing the voltage and frequency tolerance test:

(a) Power source of required capacity and range of voltage and frequency adjustments. A power source with a capability of having an independently programmable voltage and frequency output is recommended.
(b) Voltmeters (true rms) - plus or minus 1/2 percent accuracy.
(c) Frequency meter - plus or minus 1/2 Hz accuracy.
(d) Temperature meter - plus or minus 3 degrees accuracy.

5.3.1.2 Procedure. The user equipment shall be operated in one of the normal operating modes within the user frequency and voltage tolerance envelopes as shown on figure 7 through 10 as applicable, until the equipment temperature has stabilized. The power input voltage and frequency shall then be varied in accordance with table II, and the user equipment shall be operated at each voltage and frequency combinations until the equipment temperature has stabilized and for a period of 1 hour, thereafter. This test shall be repeated for each mode of equipment operation. Frequency, voltage and internal equipment temperatures shall be measured and recorded as required until temperatures have stabilized and at 30 minute intervals, thereafter.

5.3.2 Voltage and frequency transient tolerance and recovery test. The user equipment performance shall be evaluated under the transient frequency and voltage conditions specified in table III.

TABLE III. Transient voltage and frequency tolerance and recovery test.

	Type I power		Type II power		Type III power	
Condition	Voltage	Frequency	Voltage	Frequency	Voltage	Frequency
Upper limit	plus 20 percent	plus 5-1/2 percent	plus 20 percent	plus 6-1/2 percent	plus 5-1/2 percent	plus 1-1/2 percent
Lower limit	minus 20 percent	minus 5-1/2 percent	minus 20 percent	minus 6-1/2 percent	minus 5-1/2 percent	minus 1-1/2 percent

5.3.2.1 Apparatus. The following apparatus is recommended for performing the voltage and frequency transient tolerance and recovery test:

(a) Power source - see 5.3.1.1.
(b) Voltmeters (true rms) - plus or minus 1/2 percent accuracy.
(c) Frequency meter - plus or minus 1/2 Hz accuracy.
(d) Recording oscillograph or storage oscilloscope having 500 kHz response.
(e) Current and potential transformers and probes as required.

5.3.2.2 Procedure. The user equipment to be tested shall be operated in a normal operating mode within the user voltage and frequency tolerance envelopes as shown on figures 7 through 10, as applicable, until the equipment temperatures have stabilized. The power input voltage and frequency shall then be suddenly changed to the applicable upper limit of table III within 0.1 second. Simultaneously, change the frequency to the applicable upper limit of table III. Return the voltage and frequency to the user tolerance band within the applicable recovery time of table I items (j)(2) and (d)(2). Input voltages, frequency, and input line currents shall be recorded before initiation of the voltage and frequency transient and until the transient is completed. Initial condition of voltage, frequency and line current shall be measured and recorded before the start of each test. Repeat the test for the applicable lower limit of voltage and frequency given in table III. Repeat the test for the applicable upper and lower limits of transient voltage and frequency of table III for each normal mode of operation.

5.3.3 Voltage spike test. A voltage spike test shall be conducted to evaluate the capability of user equipment to withstand the voltage spike as specified in figure 2 (see 3.12.5). It is recommended the voltage spike be applied to the power leads at not more than 1.5 meter from the equipment input terminals.

5.3.3.1 Apparatus. The following apparatus is recommended for conducting the voltage spike test:

(a) Power source - (see 5.3.1.1). The power source shall withstand the voltage spike test. To reduce the magnitude of voltage spikes imposed on the power source during testing, between the power source and the test circuit, a single inductor-metal oxide varistor (MOV) combination or a double inductor MOV combination can be installed. The double inductor MOV combination is preferable since greater reduction of the voltage spike is effected at the power source. Additional spike suppression can be achieved by connecting three MOVs in parallel in place of each individual MOV. The inductor(s) value should be as high as practicable without causing a voltage drop of such a magnitude that the input voltage to the Equipment Under Test (EUT) is below the limit specified in this standard. The current drawn by the EUT will determine the maximum allowable inductor(s) value. Five ohms damping resistors should be connected across each inductor to eliminate unwanted oscillations. Also, it is necessary to connect a one microfarad capacitor across each set of MOVs to filter out the high frequencies present on the leading edge of the voltage surge generated by the spike generator.
(b) Solar Spike Generator, Model 7399-1 (modified) or equivalent.
(c) Oscilloscope with a minimum band width of 30 megahertz (MHz) and a Tektronix P6103A Probe or equivalent.
(d) Pearson wide-band current transformer or equivalent.
(e) High value capacitors, G.E. Company, 28F Series or equivalent.

5.3.3.2 Procedure. The user equipment shall be disconnected from the power source and the voltage spike waveshape shown on figure 2 shall be superimposed on the power source voltage. The voltage exhibited on the power user equipment shall have a peak value of 2,400 to 2,500 V for 440 V systems and 900 to 1,000 V for 115 V systems. The voltage spike shall be developed between any two power lines and from each power line to ground. After establishing the voltage spike on the power system, the user equipment shall be reconnected and the voltage spike shall be applied at 0, 90, and 270 degrees. The test shall be repeated for each pair of power lines and from each line to ground. Detailed procedures and test circuit configurations are contained in appendices A through D as follows:

(a) Appendix A - Voltage Spike Test, Line-to-Ground, Type I, 60 Hz, Three-Phase User Equipment.
(b) Appendix B - Voltage Spike Test, Line-to-Line, Types I, II, and III, 60 Hz and 400 Hz, Single and Three-Phase User Equipment.
(c) Appendix C - Voltage Spike Test, Line-to-Ground, Types II and III, 400 Hz, Three-Phase User Equipment.

NEW PAGE.

(d) Appendix D - Voltage Spike Test, Line-to-Ground, Types I, II, and III, 60 Hz and 400 Hz, Single-Phase User Equipment.

5.3.4 Emergency condition test. The emergency condition test shall be used to evaluate the user equipment performance under the following conditions:

(a) Power system sudden interruptions.
(b) Rapid re-application of power after an interruption.
(c) Power source voltage and frequency decay test
(d) Emergency condition voltage and frequency tolerances.

5.3.4.1 Apparatus. The following apparatus is recommended for conducting this test:

(a) Power source - see 5.3.1.1 or a motor generator set.
(b) Voltmeters (true rms) - plus or minus 1/2 percent accuracy.
(c) Frequency meter - plus or minus 1/2 Hz accuracy.
(d) Storage oscilloscope or recording oscillograph.
(e) Current and potential transformers as required.
(f) Frequency to voltage transducer.

5.3.4.2 Procedure. The user equipment shall be operated in a normal operating mode and with the power input voltage and frequency within the user tolerance envelope as shown on figures 7 through 10, as applicable, until the equipment temperatures have stabilized. The input power shall be suddenly interrupted. After an interval between 40 ms to 60 ms, the input power shall be suddenly reapplied. After the equipment has been operated long enough to detect any major performance degradation and to include equipment recycling time, the power to the user equipment shall be interrupted for an interval of 2 minutes followed by the sudden reapplication of input power to the user equipment. This cycle shall be repeated in all operating modes. Power source frequency, line voltage (one-phase), and line current shall be measured at the user equipment power input terminals and recorded before the start and during each cycle. Following the power system interruption tests, the power source shall be modified as required to provide a voltage and frequency decay characteristic approximating that shown on figure 3 for the half-load curve. With the user equipment operating in one of the normal operating modes and with the power input voltage and frequency within the user tolerance bands, initiate the power source output voltage and frequency decay characteristics specified above. One line voltage, line current and frequency shall be measured and recorded before the initiation of and during the power source decay test. Repeat the power source decay test for each operating mode. Upon completion of the power source decay test, the user equipment shall be subjected to the emergency condition positive excursion tolerances specified in table I, items (s) through (u). The user equipment shall be operated in a normal mode with the power input voltage and frequency in the user tolerance band. The power input voltage and frequency shall be varied in accordance with the positive excursion limits and time durations specified in table IV. One line voltage, one line current and frequency shall be measured and recorded before and during each of the emergency condition tests. Repeat the test for each operating mode.

Supersedes page 19 of 13 October 1987.

TABLE IV. Emergency condition test.

Emergency condition		Voltage tolerance percent of nominal	Frequency tolerance percent of nominal
	Maximum excursion:	plus 35	plus 12
Duration	Type I power systems	2 minutes	2 minutes
	Type II power systems	0.17 second	0.17 second
	Type III power systems	0.17 second	0.17 second

5.3.5 Grounding test. For ungrounded systems, user equipment shall be tested for proper operation in each operating mode with one power input line grounded.

5.3.5.1 Apparatus. The following apparatus is recommended for this test:

(a) Power source - see 5.3.1.1.
(b) Voltmeter (true rms) - plus or minus 1/2 percent accuracy.
(c) Frequency meter - plus or minus 1/2 Hz accuracy.
(d) Storage oscilloscope or oscillograph.
(e) Current and potential transformers as required.

5.3.5.2 Procedure. Each power input line shall be grounded through a 100,000-ohm resistor of adequate capacity and voltage rating. Each 100,000-ohm resistor shall have in parallel a single pole fused switch or circuit breaker of adequate rating. The user equipment enclosure shall be grounded to the same ground plane. With the equipment operating in a normal operating mode and with voltage and frequency within the user tolerance envelopes, short one of the 100,000-ohm resistors. Leave the ground condition on for a sufficient period to determine any user equipment degradation. Ground each power line in turn in the same manner. Repeat the test for each operating mode. Recordings of each input voltage shall be made for each test.

5.3.6 User equipment power profile test. User equipment shall be tested to determine the power demand in all operating modes. The power demand data shall include the data listed below for each operating mode. If the user equipment requires more than one input from the electric power system, the data shall be provided for each power input required.

Type of power
Voltage
Line currents and currents profile
Power factor
Power kilowatt (kW) rated and typical operating power profile
Surge current
Pulsed loading
Load unbalance
Spike generation

5.3.6.1 Apparatus. The following apparatus is recommended for this test:

(a) Power source - see 5.3.1.1.
(b) Voltmeters (true rms) - plus or minus 1/2 percent accuracy.
(c) Frequency meter - plus or minus 1/2 Hz accuracy.
(d) Ammeters.
(e) Power factor meter.
(f) Storage oscilloscope or recording oscillograph (500 kHz response).

5.3.6.2 Procedure. The user equipment shall be operated in accordance with the equipment operating procedure in one of the normal modes of operation. Power input voltage and frequency shall be within the user tolerance bands. Measure and record power input voltages (each phase), each line current, power factor for each phase, and power (kW). These measurements shall be made for each power input required from the electric power system. Additionally , the user equipment shall be de-energized and re-energized in accordance with the equipment operating procedures to determine surge currents. During this period of de-energizing and re-energizing, oscillograph or oscilloscope records shall be taken of one line voltage and each line current to determine surge current values during the transition. From the data collected during these tests, calculate and record the data elements specified in 5.3.6 for each user equipment power input. The power profile test shall be repeated for each normal operating mode. The power source used for this test and its characteristics shall be reported in order to assist in analyzing the impact the equipment may have on a shipboard power system. The power source rating and its source impedance, as well as the length and type of connecting cable used, shall be included.

5.3.7 Current waveform test. The harmonic content from input line frequency up to 20 kHz of current waveforms in the user equipment power input lines shall be determined for each operating mode (see 5.2.8).

5.3.7.1 Apparatus. The following apparatus is recommended for this test:

(a) Power source - see 5.3.1.1.
(b) Voltmeters (true rms) - plus or minus 1/2 percent accuracy.
(c) Frequency meter - plus or minus 1/2 Hz accuracy.
(d) Ammeters.
(e) Wide-band current probe or shunt.
(f) Potential transformers as required.
(g) Harmonic analyzer/electromagnetic interference meter, with a better than 3 percent of measured frequency band width below 2.5 kHz and a less than 75 Hz band width at frequencies between 2.5 and 200 kHz.

5.3.7.2 Procedure. When it is suspected that the power source has sufficient voltage harmonic distortion to affect harmonic current measurements, as an option, a linear load, no larger than the user equipment load and having the same fundamental frequency power factor (leading or lagging) as the user equipment to be tested, may be connected at the power interface where the user equipment would be connected. The current harmonics shall be measured. These current harmonic values may then be subtracted from the current harmonics measured in the following procedure. After disconnecting the linear load, if this option was performed, the user equipment shall be energized in accordanc with the-equipment procedure and operated in a normal mode. The power source voltage and frequency shall be within the user tolerance envelopes. The power input current harmonics shall be determined for each operating mode. The current harmonics shall be measured by means of a wide-band current probe or shunt in each power input line. The fundamental and harmonics of each line current shall be measured by means of a harmonic analyzer or electromagnetic interference meter. The current harmonics shall be determined for each normal operating mode.

5.3.8 Equipment test. User equipment to be installed on surface ships shall be subjected to a 500 Vdc insulation resistance test with input power disconnected. User equipment to be installed on submarines shall be subjected to 500 Vdc superimposed on the ac power.

5.3.9 Voltage and frequency modulation test. User equipment performance shall be evaluated under the voltage modulation and frequency modulation conditions specified in table I(i).

5.3.9.1 Apparatus. The following apparatus is recommended for performing the voltage and frequency modulation test:

(a) Power source - see 5.3.1.1.
(b) Voltmeters (true rms) - plus or minus 0.5 percent accuracy.
(c) Frequency meter - plus or minus 1/2 Hz accuracy.
(d) Recording oscillograph or storage oscilloscope having 500 kHz response.
(e) Current and potential transformers and probes as required.

5.3.9.2 Procedure. The user equipment to be tested shall be operated in a normal operating mode within the user voltage and frequency tolerance band until the equipment temperatures have stabilized. The input voltage and frequency shall be varied separately and then simultaneously according to the applicable limits of table I(i) for voltage and table I(c) for frequency for the applicable power type. Input voltage (two phases for three-phase power equipment), input line current (two line currents for three-phase equipment) and frequency shall be recorded before initiation of modulating voltage and frequency and continue throughout test run.

6. NOTES

6.1 Intended use. This standard is intended to be used in designing and testing ac electrical power systems and user equipment.

6.2 subject term (key word) listing.

Delta and Wye connected systems
Frequency decay
Leakage current
Power factor
Transient limits
Worst case frequency excursion

6.3 Changes from previous issue. Asterisks are not used in this revision to identify changes with respect to the previous issue due to the extensiveness of the changes.

Review activities:
Navy - EC, OS, YD

Preparing activity:
Navy - SH
(Reject 1990-N043)

REPRINTED WITHOUT CHANGE.

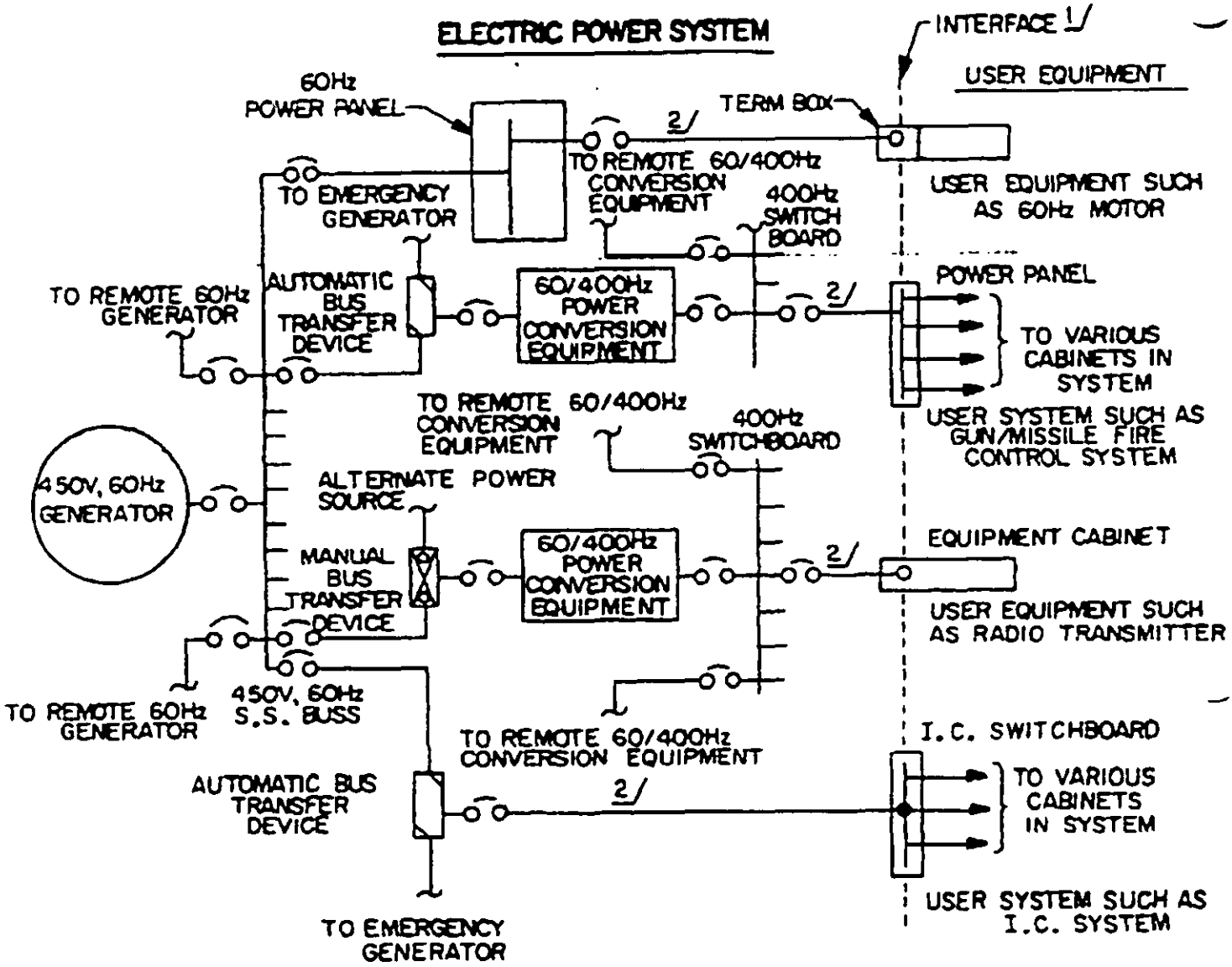

TYPICAL POWER SYSTEM CHARACERISTICS	TYPICAL USER EQUIPMENT CONSTRAINTS
VOLTAGE	TYPE OF POWER
FREQUENCY	POWER INTERRUPTION
EMERGENCY CONDITION	GROUNDING
	LOAD UNBALANCE
	PULSED LOADS
	INPUT CURRENT WAVEFORM
	SURGE CURRENT

1/ Refer to 1.4 for a description of the interface.

2/ Cables with power/lighting designations.

FIGURE 1. Typical interface of electric power system and user equipment

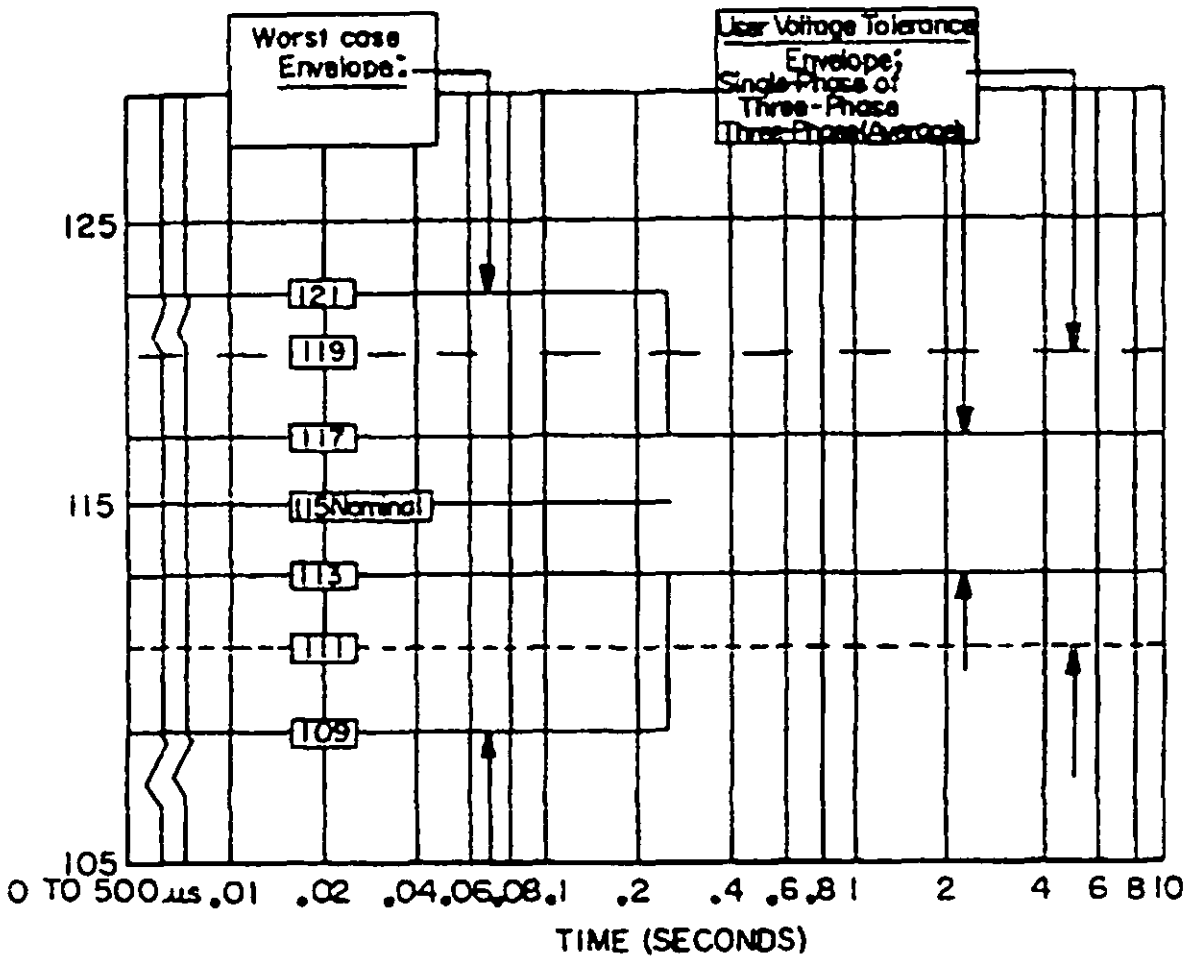

FIGURE 10. Type III. 115 V. 400 Hz power - worst case and user voltage tolerance envelopes.

Supersedes page 33 of 13 October 1987.

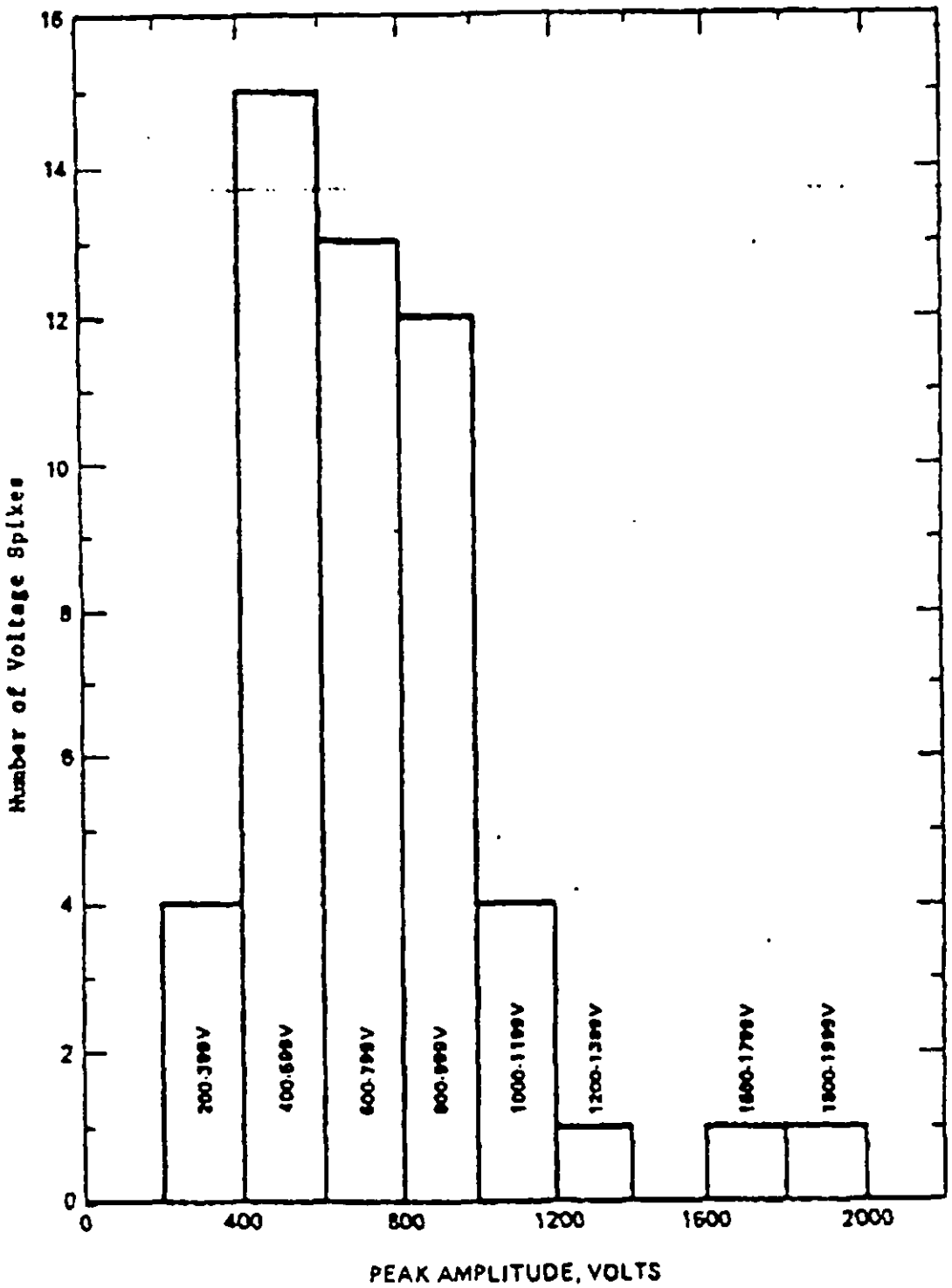

FIGURE 11. Seven day histogram of voltage spikes versus number of voltage spikes in 440 V systems.

REPRINTED WITHOUT CHANGE.

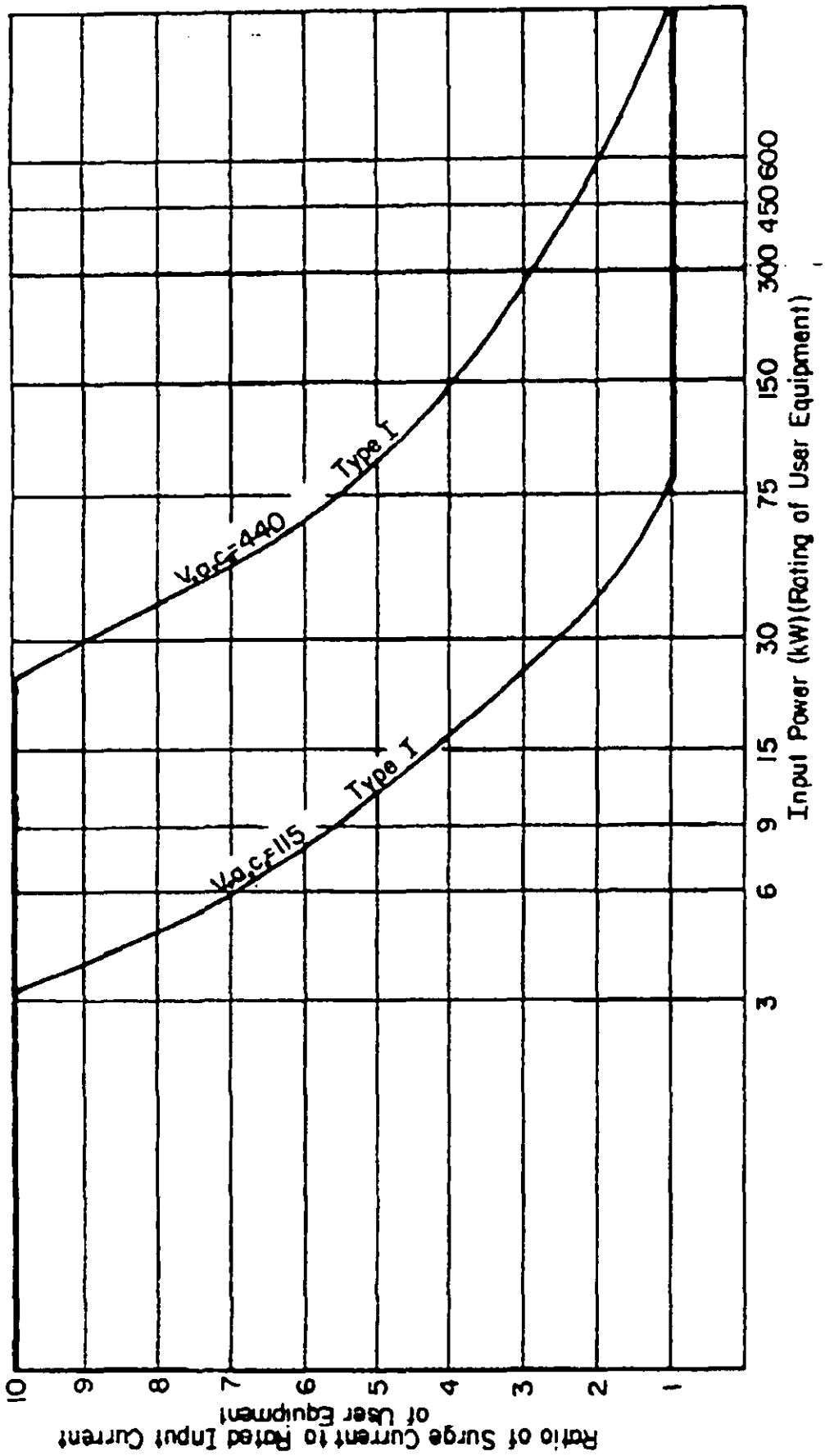

FIGURE 14. Surge current limits for non-linear user equipment using type I power.

Supersedes page 37 of 13 October 1987.

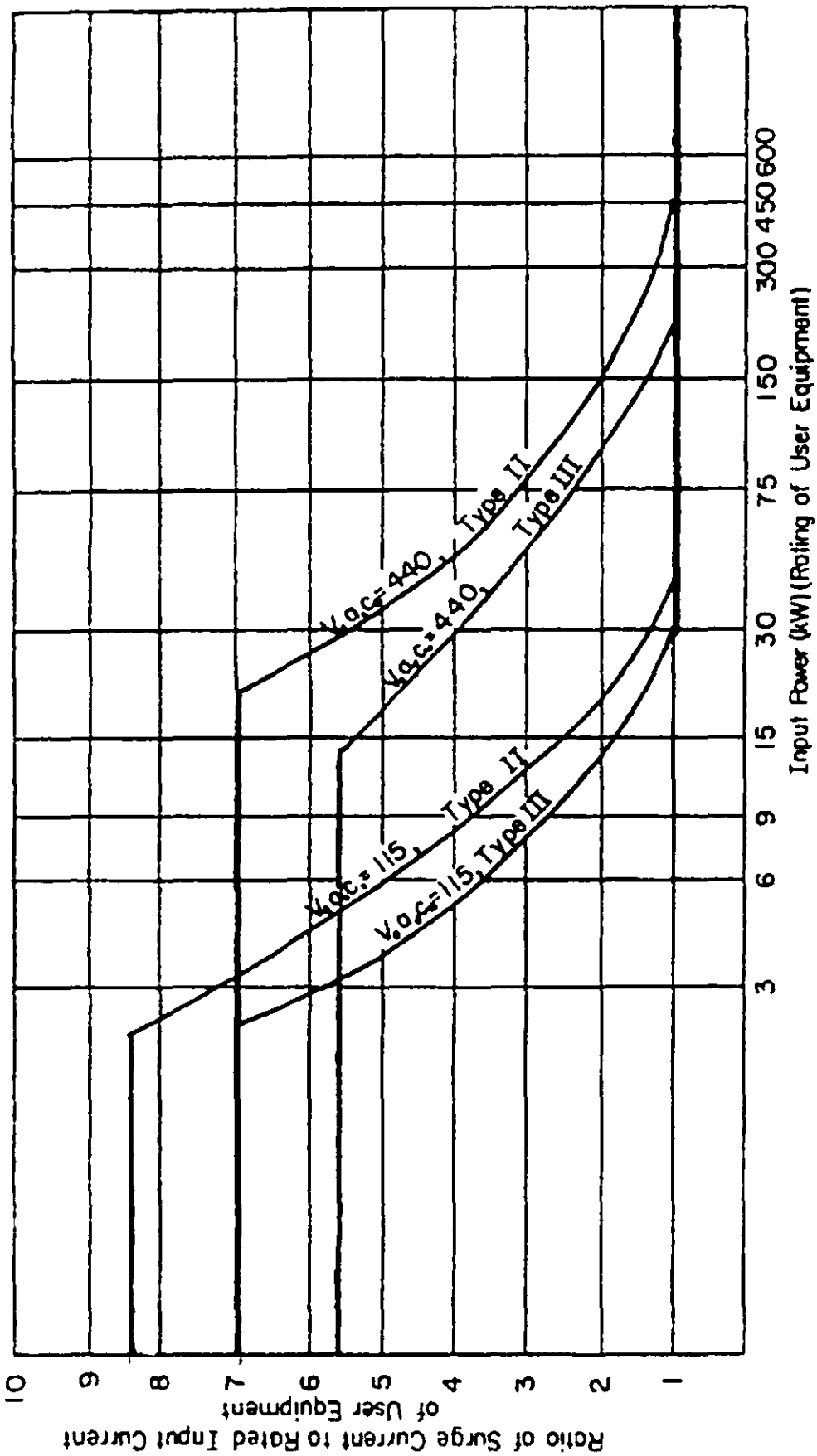

FIGURE 15. Surge current limits for non-linear user equipment using type II or III power.

APPENDIX B

PROCEDURE FOR VOLTAGE SPIKE TEST, LINE-TO-LINE, TYPES I, II, AND III, 60 AND 400 HZ, SINGLE AND THREE-PHASE USER EQUIPMENT

10. SCOPE

10.1 Application. The material presented in this appendix is recommended for use in conducting the line-to-line voltage spike test on user equipment when the required pulse width cannot be obtained using the circuit described in appendices A, C, and D.

20. REFERENCED DOCUMENTS

Not applicable.

30. DEFINITIONS

Not applicable.

40. GENERAL REQUIREMENTS

40.1 The basic circuit configuration recommended for conducting line-to-line voltage spike tests on 60 and 400 Hz user equipment is shown on figure 17. A high value capacitor shall be connected across the power source to present a short circuit to the voltage spike. This will prevent a voltage division of the voltage spike between the power source and the input impedance of the user equipment. The capacitor also acts to protect the power source and other equipment on the line from the spike voltage. For 400 Hz applications, communication circuits high energy capacitors, such as those used in silicon controlled rectifiers, shall be used since the current will be considerably higher than for 60 Hz application. General Electric Company 28F series or equivalent capacitors are recommended.

50. DETAIL PROCEDURE

50.1 The VSG is connected in series with the user equipment as shown on figure 17. The voltage spike is added to the power source voltage in this configuration. Therefore, care shall be exercised co limit the peak voltage amplitude to 2,500 V as specified in appendix A. Both positive and negative voltage spikes may be applied to the user equipment by reversing the polarity of the voltage spike generator. Because of the design of the VSG, the voltage spike is synchronized to the VSG input power when operating in the 60 Hz SYNC

Supersedes page 45 of 13 October 1987.

MODE . Therefore, for 60 Hz applications, the VSG and the user equipment shall be supplied by the same power source to permit synchronization of the voltage spike to the user equipment input voltage. The VSG is rated for 115 V; so, a step-down transformer is needed for a 440 V power source when sychronization is desired. Synchronization of the voltage spike to a 400 Hz power source is accomplished as specified in the instruction book for the Model 7399-1 Spike Generator by Solar Electronics Company or equal. The high voltage spikes may be viewed and recorded with a storage oscilloscope by attenuating the voltage spike with a Tektronix P6013A 1000X or equivalent probe. The current pulse may be measured with a Pearson wide-band current transformer, Model 301X or equivalent. The oscilloscope shall be powered through an isolation transformer. This procedure shall not be used to test user equipment that draws in excess of 100 amperes. In that case, the procedures specified in appendix A or C shall be used.

APPENDIX C

PROCEDURE FOR VOLTAGE SPIKE TESTS, LINE-TO-LINE AND LINE-TO-GROUND, TYPES II AND III, 400 HZ, THREE-PHASE USER EQUIPMENT

10. SCOPE

10.1 Application. The material presented in this appendix is recommended for use in conducting line-to-line and line-to-ground voltage spike tests on user equipment requiring types II or III, 400 Hz, three-phase power.

20. REFERENCED DOCUMENTS

Not applicable.

30. DEFINITIONS

Not applicable,

40. GENERAL REQUIREMENTS

40.1 The configuration shown on figure 18 is recommended for use in the application of line-to-line and line-to-ground voltage spikes on user equipment requiring types II or III, 400 Hz, three-phase power. This configuration was developed primarily for 440 V, 400 Hz applications to reduce line-to-ground currents and can also be used for 60 Hz power systems when required to limit ground currents. For 115 V, 400 Hz applications, the test circuit shown on figure 16 may be adequate since line-to-ground currents are much lower at 115 V than at 440 V. However, the choice of use of the circuits on figures 16 or 18 shall be made by the user of the VSG.

50. DETAIL PROCEDURE

50.1 The VSG output is connected between a power line and line-to-ground tank circuit as shown on figure 18. Connecting the VSG in this manner results in the simultaneous addition of 1 voltage spike to a line-to-ground voltage waveform and to two phase voltages when the ignitron fires. In this test circuit, line-to-line capacitors cannot be connected between phases because suppression of the transient would occur. Since voltage spikes are applied to the power source and other equipment operating on the line, as well as the user equipment, a dedicated power source that can tolerate high voltage spikes shall be used to power the user equipment. Damage to the VSG and other test equipment shall be avoided by synchronizing the VSG to the power source from the phase in which no voltage spike appears. Table V of appendix A shows the phase to be used for synchronization. Peak voltage amplitudes exceeding 2,500 V are readily generated in this test. Therefore, the steps described in appendix A shall be followed to

Supersedes page 47 of 13 October 1987.

limit the peak voltage (voltage spike plus line-to-ground voltage) to 2,500/1000 V. In the test circuit of figure 18, the power source and tank circuits are in parallel with the internal load of the VSG which consists of an air core inductor, L_1, and a resistor, R_1, connected in parallel. Should the source impedance or the tank circuit capacitance be low in value, a considerable decrease in pulse width occurs. Restoration of the pulse width to the specified value will entail re-selection of tank circuit capacitance value and modification of the VSG discharge circuit. The following simple modifications shall be implemented if the required pulse width is not obtained when first establishing the voltage spike on the power system with the user equipment disconnected:

(a) Disconnect inductor L_1.
(b) Add a power resistor, R_1, in series with the 0.667 ohm resistor, presently installed in the VSG as shown on figure 16.

When first establishing the voltage spike, suggested values for C_1, L_1, and R_1 are:

C_1 - 25.5 microfareds
L_1 - 5.7 mH
R_1 - 10 ohms

R_1 shall be a power rib or ribwound resistor. The resistor ribs shall be spaced wide enough to prevent arcing across the ribs during the discharge.

These component values enable the specified voltage pulse (see figure 2) to be established on the output voltage of a Burke, 153 kW, 450 V, 400 Hz motor generator set, or equal, operating at no load. The line-to-neutral impedance of this type of machine is predominantly inductive at low harmonic frequencies with an inductance of approximately 100 mH. Other power sources will most likely require different component values. When tuned to 400 Hz, the tank circuits will block most of the line-to-ground current and allow higher values of line-to-ground (tank circuit) capacitance to be used. Although the current flow through resistors R_1 and R_2 is substantially reduced by the tank circuit, high circulating current will flow through the tuned, tank circuit components. This current will depend on the component value of the filter elements and shall be calculated so that the filter elements can be selected accordingly. Capacitors designed for high energy use, such as those specified in appendix B, 40.1, shall be utilized. As R_1 and C_1 are increased or decreased, the voltage spike width will increase or decrease accordingly. Any change in C_1 will require reselection of L_1 and, hence, retuning of the tank circuit. Instead of modifying the tank circuit, an increase in voltage spike width can be obtained by increasing the discharge capacitance value of the VSG. Modification of the VSG shall be accomplished by means of the procedures specified in appendix A.